AMERICAN FORK CITY
NOTICE OF PUBLIC HEARING
&
PLANNING COMMISSION REGULAR SESSION
March 22nd, 2023
7:00 p.m.

Notice is hereby given that the American Fork City Planning Commission will meet in regular session on March 22nd, 2023 at the American Fork City Hall, 31 North Church Street, commencing at 7:00 p.m. The agenda shall be as follows:

REGULAR SESSION

Pledge of Allegiance

Roll call

COMMON CONSENT AGENDA

(Common Consent is that class of Commission action that requires no further discussion or which is routine in nature. All items on the Common Consent Agenda are adopted by a single motion unless removed from the Common Consent Agenda).

1. Approval of the March 8th, 2023, Planning Commission minutes.

PUBLIC HEARINGS

1. Public hearing and recommendation on a proposed Land Use Map Amendment at approximately 96 North 350 West, on approximately 0.77 acres; changing the Land Use Map from Residential High Density to the General Commercial Land Use designation.

2. Public hearing and recommendation on a proposed Land Use Map Amendment for approximately 0.60 acres of land located at approximately 401 West Main Street, from Design Commercial to the General Commercial Land Use designation.

3. Public hearing and recommendation on a proposed Zone Change for approximately 0.60 acres of land located at approximately 401 West Main Street, from the R2-7500 Residential Zone to the Central Commercial (CC-2) Zone.

ACTION ITEMS

1. Review and action on a Site Plan application for the Perfect Dress Project, located at 424 West Main Street, in the Central Commercial (CC-2) Zone.

2. Review and action on an application for an accessory structure in excess of 1,000 square feet, located in the area of 33 East 100 North in the Residential (R4-7500) Zone.

3. Review and action on a Site Plan application for the Children's Justice Center Project, located at 96 S 100 E, in the Central Commercial (CC-1) Zone.

OTHER BUSINESS

1. Upcoming Projects

ADJOURNMENT

Dated this 9th day of March, 2023

Patrick O'Brien

Development Services Director

*The order of agenda items may change at the discretion of the Planning Commission Chairman

AMERICAN FORK CITY

PLANNING COMMISSION REGULAR SESSION

March 8, 2023

The American Fork City Planning Commission met in a regular session on March 8, 2023 at the American Fork City Hall, 31 North Church Street, commencing at 7:00 p.m.

Commissioners Present: Christine Anderson, Chris Christiansen, David Bird, Rodney Martin,

Absent: Jenny Peay, Harold Dudley, Bruce Frandsen

Staff Present:

Travis Van Ekelenburg	Senior Planner
Cody Opperman	Planner 1
Levi Burr	Engineer
Melissa White	Admin Assistant
Angela McKee	Admin Assistant

Others Present: David Thorne

REGULAR SESSION

Christine Anderson led the "Pledge of Allegiance"

Roll Call

COMMON CONSENT AGENDA

1. **Minutes of the February 22, 2023 Planning Commission Regular Session.**

Chris Christiansen motioned to approve the minutes. David Bird seconded the motion.

Christine Anderson	**AYE**
Chris Christiansen	**AYE**
Rodney Martin	**AYE**
David Bird	**AYE**

PUBLIC HEARINGS

1. **Public hearing and recommendation on a proposed amendment to American Fork City's Bike and Pedestrian Plan to update the plan for future pedestrian infrastructure throughout the City.**

Cody Opperman reviewed the background information for public hearing item number 1: As the Design Industrial Land Use continues to expand in the south of the City more adjustments needed to be made towards pedestrian infrastructure. Eliminating and redirecting routes was necessary as there were inconsistencies with the General Plan and developments throughout the City. The proposed amendment to the masterplan will terminate part of the linear park trail and redirect it to other areas of the community. In addition, some other amendments are being proposed to address issues with previously planned trails and what was or was not implemented. The red areas indicate the abandonment of the pedestrian infrastructure, and the purple areas indicate the reroutes.

The Parks and Trails Committee has been presented with the concept and is supportive of the changes.

David Bird: Are the alternate routes following existing roads or are they separate paths not attached to the roads?

Cody Opperman: These will follow existing roads or roads we are proposing for the future. We are trying to ensure they follow the Master Transportation Plan as well.

David Bird: We are looking at the biking lane connected to the road?

Cody Opperman: Yes, as well as side paths and shared use paths and things like that. The difference between a side path is that it is for walking, and a shared use path also includes bike use and pedestrian walkways.

Mr. Martin thanked the Planning and Zoning department for their work.

Public Hearing Opened

No public comment

Public Hearing Closed

Rodney Martin motioned to recommend approval of the amendment to the American Fork General Plan, and to amend the American Fork City Bike and Pedestrian Plan.

Chris Christiansen seconded the motion. Voting was as follows:

Christine Anderson	**AYE**
Chris Christiansen	**AYE**
Rodney Martin	**AYE**
David Bird	**AYE**

The motion passed

2. **Public hearing and recommendation on a proposed Land Use Map Amendment at approximately 9 W 1100 S, on approximately 4.35 acres; changing the Land Use Map from Residential Low Density to the Design Industrial Land Use designation.**

Cody Opperman reviewed the background information for public hearing item number 2: The applicant is applying for a land use map amendment for the property located at approximately 9 W 1100 S from the Residential Low-Density designation to the Design Industrial designation. There is one parcel with this request that consists of 4.35 acres in total.

The proposed Design Industrial Land Use designation is being requested prior to an annexation for this property. It is currently unincorporated property. Staff recommends approval of this Land Use Map Amendment to continue to enhance planned industrial developments east of Boat Harbor Road.

Justification Statement from the applicant: "*With the recent expansion in ecommerce, the need for industrial office warehouse has increased dramatically. Utah County has continued to attract many large companies seeking office warehouse to expand their business.*

American Fork City has identified this area of the city as the correct location for expanded industrial development. With the recent construction of the Deer Park project adjacent to the parcel in question, we feel it makes sense to change the land use designation of this parcel from Residential Low Density to Design Industrial. Many of our prospective tenants have requested additional space for their business operations and our request is a result of their desire to expand."

David Bird: This area is east of Boat Harbor Road and Industrial will be on the west side of the [Deer Park Industrial] property?

Cody Opperman: That is correct.

Rodney Martin: It fits within the use.

Public Hearing Opened

No public comment

Public Hearing Closed

David Bird motioned to recommend approval of the Land Use Map Amendment to Design Industrial, for the property located in the area of 9 W 1100 S, subject to any findings, conditions, and modifications found in the Staff Report.

Rodney Martin seconded the motion. Voting was as follows:

Christine Anderson	**AYE**
Chris Christiansen	**AYE**
Rodney Martin	**AYE**

David Bird AYE

The motion passed

ACTION ITEMS

1. **Review and action on an ordinance creating section 17.5.136 of the American Fork City Municipal Code relating to rock crushing and providing an effective date for the ordinance.**

Chairwoman Anderson noted that action item number 1 was pulled from the agenda.

2. **Review and action on a Site Plan application for the Children's Justice Center Project, located at 96 S 100 E, in the Central Commercial (CC-1) Zone.**

Travis Van Ekelenburg reviewed the background information for action item number 2: The applicant is applying for Site Plan Approval for the Children's Justice Center, for the development of a justice center for children facing abuse, located at 96 South 100 East. The proposal consists of 1 parcel for a governmental structure and the entire development parcel consists of approximately 0.2 acres. The current site has been approved by City Council to have 6 parking stalls, but no Site Plan has been approved just yet. The Children's Justice Center Project has been brought back to Planning Commission because the previous Site Plan that was approved had seven parking stalls, now they are providing 6. Due to this Site Plan adjustment, it has been brought back to Planning Commission and will need a recommendation to their parking stalls for their final step of the Site Plan.

Rodney Martin: I would like to know what the use of the site is now such as the number of employees, who's going to be using this, etc. We already have problems in the city of someone coming in and using street parking because their employees don't have anywhere to park, nor do their customers. As much as we support the mission of the Children's Justice Center.

Heather Allen: I'm the Associate Director of the Children's Justice Center. Yes, the location will still be used for the Children's Justice Center. It is a facility where clients will come in and be there for approximately two hours. There's a common misconception that we house people and that's not the case. We have regular business hours from eight to five, typically, unless any of our interviews run a little bit longer and it is Monday through Friday. Very rarely we will be there on weekends, but that is if we have an urgent need for a child. We have six employees total, but half of them are part-time. It's typically three or four employees a day. At the moment we're just seeing one family at a time, because we don't want to overlap for confidentiality.

Rodney Martin: With the number of people you have employed there while seeing one client - which would possibly include both parents, a caseworker, and a parent or foster parent - you're maxed out on your parking. You can't accept any more with six stalls. I came in late on this, but how did we get to six stalls being sufficient?

David Thorne: I'm the general contractor on site. Part of the due diligence that we did on this was having a parking study done. They studied the Children's Justice Center at their current location [in Provo, UT], on their busiest day of the week, and they studied the comings and goings of employees and clients. They came in with a recommendation of four parking stalls for the Children's Justice Center. That's how we got a reduction down to six stalls. It was seven originally, but six through the City Council. 14 stalls is physically impossible to get on the site without ripping down the original 1871 home. That is a challenge that we're trying to work through. We got down to seven, but we didn't realize exactly what the challenges were. There were some comments at the last Planning Commission meeting that stated that we were supposed to make some revisions. We weren't sure what they were when the Planning Commission voted. The day after, we found out that they wanted us to re-do the whole site plan that was approved by the last Planning Commission to accommodate the seven stalls because of some safety concerns with the angled stalls on 100 East. If we had known those issues, we would have probably requested six at the original Planning Commission meeting so that we didn't have to put stalls on site. That's why we requested six at City Council. We're still over by two stalls of the recommended through the parking study. We will not have angled parking on 100 East, but we will have one single stall that is parallel, four parallel stalls on 400 South, and one handicap stall on site. There is angled parking in front of the library that we need to turn to parallel.

We’re so close to the corner that there were safety concerns and we wanted to accommodate the safety concerns.

David Bird: What are the prospects of needing to expand your facility? Currently you say that you are dealing with one family at a time. In the future would you expand to have two or three or more? If that is a possibility, it would put more pressure on the parking situation.

Heather Allen: That is not something we've been able to evaluate yet because we're still trying to figure out this parking situation and what the new building will be capable of handling. My dream scenario would be to buy the property behind us and we can keep growing. Right now with the current house we do not know. We have been in conversations with the Church of Jesus Christ of Latter Day Saints to use some of the parking that's behind the church as there is an entrance that is diagonal from where the building is located. It is a short distance and my staff and I would be fine walking that short distance. It has not been solidified with the church, but it looks like we are going to have an ongoing agreement with them that we would renew periodically.

Rodney Martin: Can any of the Commissioners shed light on the situation or what has happened previously. I still feel uncomfortable with the parking situation, am I out of line in feeling that way?

Travis Van Ekelenburg: They originally submitted several site plans. We looked at the feasible options on the property, and the Planning Commission wanted to approve the site plan that was originally here [with 14 stalls]. City Council reduced it to six stalls so it's coming back to you with a revised site plan. Since it's in the CC-1 zone, the Planning Commission is the approval body for the site plan, and then you give a recommendation of approval for the support of the City Council's decision on the number of parking stalls.

Rodney Martin: This doesn't conflict with any zoning or any other requirements in the city just because they are the Children's Justice Center?

Chris Christiansen: Part of this was the historical nature of the building. I know the covered porch was brought up which potentially creates more stalls there, but again, preserving the [historical nature of the building was considered important]. I think there were grading issues that were talked about as well. We were okay with seven stalls at that point.

David Thorne: The only difference of the site plan that was approved by the last Planning Commission and the site plan that is before you today is a reduction of one stall. It went from two angled stalls that were approved to just one parallel stall. That's the only difference, and it was to account for safety in the site triangles.

Chris Christiansen motioned to approve the site plan and recommend the reduction of parking stalls to six stalls, for the redevelopment of a property for use as the Children's Justice Center, located at 96 South 100 East, in the CC-1 zone, subject to any conditions found in the Staff Report and recommended by the Fire Marshall.

David Bird seconded the motion. Voting was as follows:

Christine Anderson	**AYE**
Chris Christiansen	**AYE**
Rodney Martin	**NAY**
David Bird	**AYE**

The motion did not pass

Rodney Martin: I may be in the minority, but I see problems. Our city is growing. The need for these kinds of services is growing. It may be the case that this historical building that we all love is not the place for the Children's Justice Center and they need to find somewhere else that more suitable for the services they provide and are going to provide in the future.

David Bird: I think that building is one that should be preserved. I think using it for the Children's Justice Center gives the new occupants the opportunity to revive, revitalize, and improve, and to bring the standards up to code. Currently, they have one family at a time and minimal employees there. I don't see it as a problem. Five years down the road there may be two families or three families, but we've never approved anything based on what might happen five years down the road. I see it as a good use of this building. [The building] could otherwise potentially fall into disrepair. I hate to see a solid, legitimate use locked on account of a couple of parking spaces that can be accommodated with the tabernacle. That's why I think it would be a good addition.

Rodney Martin: With all due respect, we do vote on things based on what the future is likely to bring. We base our road width based on what we expect the build-out to be, and things like that. We plan for the future. I for one don't want to be the Commission that approves something that is going to be a major headache and cause people to complain and say, "How could they possibly approve this? This is so short-sighted." I'm not comfortable with it.

Heather Allen: As far as being able to move, if I could have, I would have. I bought this home in November of 2020 and we have had a lot of roller coaster ups and downs trying to make this house happen. The first time I walked through it I felt in my heart that it was the place that the CJC was supposed to be. We try to have a home-like environment so that the children feel comfortable and safe. When I walked through it, it felt like it was supposed to be the CJC. Well, we had issue after issue, especially before we started working with David. The home was purchased with funds that were from a CDBG (Community Development Block Grant). Because the previous contractor had started doing things to the home, we would have to repay that money to CDBG. There's no way that we could recoup that money at this point.

Chairwoman Anderson: Given the size of the house, would it be possible to serve two different families at the same time?

Heather Allen: Yes and no. Because of the office space there's not really a way for us to expand our employees; it already has the max number of offices that we can possibly have, so having more employees is not feasible. As it stands right now there's not really the space to have two families there at the same time while protecting confidentiality. We are not at the stage of the building plans yet, so it's hard to say for sure without knowing what is possible to do with the house and how many people it is capable of holding. Yes, if in the future we could serve more than one family [it would be ideal], because that's what the Provo center is currently doing. But they have a much larger building and have three times the employees, so it is hard to predict.

David Bird: Mr. Martin, is your main concern the parking situation?

Rodney Martin: Yes, and using on-street parking. I know we have approved on-street parking to count towards the total number of stalls in this area here, and around City Hall for the Harrington. However, I have a hard time feeling

comfortable with this because the downtown area is going to change and grow as we move towards high-density. I don't believe in flooding our streets during office hours. Yes, 14 stalls seem like too many based on the Children's Justice Center's use, but 14 stalls to 6 stalls is a huge reduction.

Chairwoman Anderson: I think is worth considering that if one of the cars parked at this facility is not handicapped then there are only five spots. I wonder if we could get formal acceptance from the location across the street to allow [for additional parking], and if that will make a difference.

Travis Van Ekelenburg: We don't have anything like that for parking agreements that aren't contiguous to the property itself, which means there is nothing the city can do in that regard.

David Bird: I can see your concern, Mr. Martin. I have to vacillate between [the parking concern] and the use of the building. I think it is a just and good use for the building. The area around it is pretty much filled in, and I would not anticipate a lot of growth in the immediate area around it. It is an older section of town and pretty well-established, and there is not a lot of vacant area to build high-density housing.

Rodney Martin: To the north is the parking lot for the American Fork library. To the west of the library is Humphries [Welding Supply] which takes up most of the block for their warehousing, etc. When Humphries leaves, the entire middle of that block is going to be set up for future development. There are numerous older homes that are going to be torn down eventually and replaced with other buildings, etc. As much as I love the mission of the Children's Justice Center, I don't know that that is a good enough reason to brush aside the fact that there is not enough parking. Yes, they can use the angled parking in front of the library or the library parking lot. However, who they are should not exempt them from reasonable requirements.

Chris Christiansen: I don't necessarily think it's because of who they are. It's evaluated on the current use of the property, the requirements, and the traffic that's going through. They will have to work within the zoning of whatever that future use is. But for me, it's not about who they are as much as the demand for that area that is going to make an impact now. If you were to turn this into a convenience store, then there would be a lot more traffic. However, I don't think that is going to

be the future use that we would see there. I think it's great to have differing views on this. However, because we're limited to four Commissioners here tonight, I'd like to make a recommendation that respects both parties.

Chairwoman Anderson: I do not want anyone to feel as though they must come to a unanimous decision if they do not agree with the decision.

Rodney Martin: I'm not trying to be an obstructionist. I understand that the Planning Department has signed off on this, and the previous Planning Commission meeting signed off on this with one more parking space. In my opinion, putting the burden on street parking is tough.

Travis Van Ekelenburg: As a reminder, the City Council did approve six stalls.

Chris Christiansen: This item was at this Commission approximately two months ago and it was this Commission that approved [seven stalls].

David Thorne: Hales Engineering did a full report, and it should be included in what was submitted in the parking study. You're welcome to read their recommendation. As I understand it, the use is for government use. If anything was to ever change out of government use, then the parking requirements don't stay at six [stalls]. If they were to sell the building in the future and it goes to somebody else, it goes back to the 14 stall requirement.

Travis Van Ekelenburg: Any new use to come into the building would have to adhere to whatever those parking requirements would be.

David Bird: Any variances allowed now would be rescinded if the building sold?

Travis Van Ekelenburg: Correct. Just like any other building that’s vacated, if another use comes in it has to adhere to that use and meet current requirements.

Rodney Martin: I wish we had more Commissioners tonight to make this decision.

David Bird: Perhaps we should table it until we have more Commissioners to vote.

Chris Christiansen motioned to table action on the site plan and parking reduction request for the redevelopment of a property for use as the

Children's Justice Center, located at 96 South 100 East, in the CC-1 zone until the Planning Commission has a fuller quorum.

Rodney Martin seconded the motion. Voting was as follows:

Christine Anderson	**AYE**
Chris Christiansen	**AYE**
Rodney Martin	**AYE**
David Bird	**AYE**

The motion was tabled.

OTHER BUSINESS

Cody Opperman: We are staying busy and continuing to see a lot of developments come through our process. We're kicking off our Station Area Plan and will have our first meeting tomorrow. The Station Area Plan is a requirement from the state, and it also helps with one of our goals that we have set in the Moderate Income Housing Plan as well. It's in the vicinity of our TOD zone. We're still getting some annexations and we're continuing to grow south of I-15.

Upcoming Projects

ADJOURNMENT

David Bird motioned to adjourn the meeting. Chris Christiansen seconded the motion.

Meeting adjourned at 7:37 PM

Melissa White

Administrative Assistant

The order of agenda items may change to accommodate the needs of the commissioners, public and staff.

AMERICAN FORK CITY PLANNING COMMISSION **MEETING DATE:** March 22, 2023

AGENDA TOPIC:

Public hearing and recommendation on a proposed Land Use Map Amendment for property located at approximately 96 N 350 W, from the Residential High Density to the General Commercial Land Use designation.

BACKGROUND INFORMATION		
Location:		96 North 350 West
Applicants:		ABE Properties, LLC
Existing Land Use:		Residential High Density
Proposed Land Use:		General Commercial
Surrounding Land Use:	North	Residential High Density
	South	Residential High Density
	East	Residential High Density
	West	Residential High Density
Existing Zoning:		R3-7500
Proposed Zoning:		N/A
Surrounding Zoning:	North	R3-7500
	South	R3-7500
	East	R3-7500
	West	R3-7500

BACKGROUND:

The applicant is applying for a Land Use Map Amendment for property located at approximately 96 N 350 W, from Residential High Density to General Commercial land use designation. All parcels consist of 0.77 acres.

The subject property was previously on the regularly scheduled Planning Commission meeting on February 8, 2023, and received a positive recommendation to the City Council for the CC-2 Zoning designation. On February 28, 2023 the same application was before the City Council and passed with the condition that the Land Use Designation would need to be changed for the Zone Change to be finalized.

POTENTIAL MOTIONS – Land Use Map Amendment

APPROVAL

I move that we recommend approval of the Land Use Map Amendment from Residential High Density to General Commercial, for the properties located in the area of 96 N 350 W, subject to any findings, conditions, and modifications found in the Staff Report, or recommended by the Fire Marshal.

DENIAL

I move that we deny of the Land Use Map Amendment from Residential High Density to General Commercial, for the properties located in the area of 96 N 350 W, with a finding that the proposed Land Use is not contiguous to the adjacent properties.

TABLE

I move that we table action on the Land Use Map Amendment from Residential High Density to General Commercial, for the properties located in the area of 96 N 350 W, and instruct the developer/staff to _____.

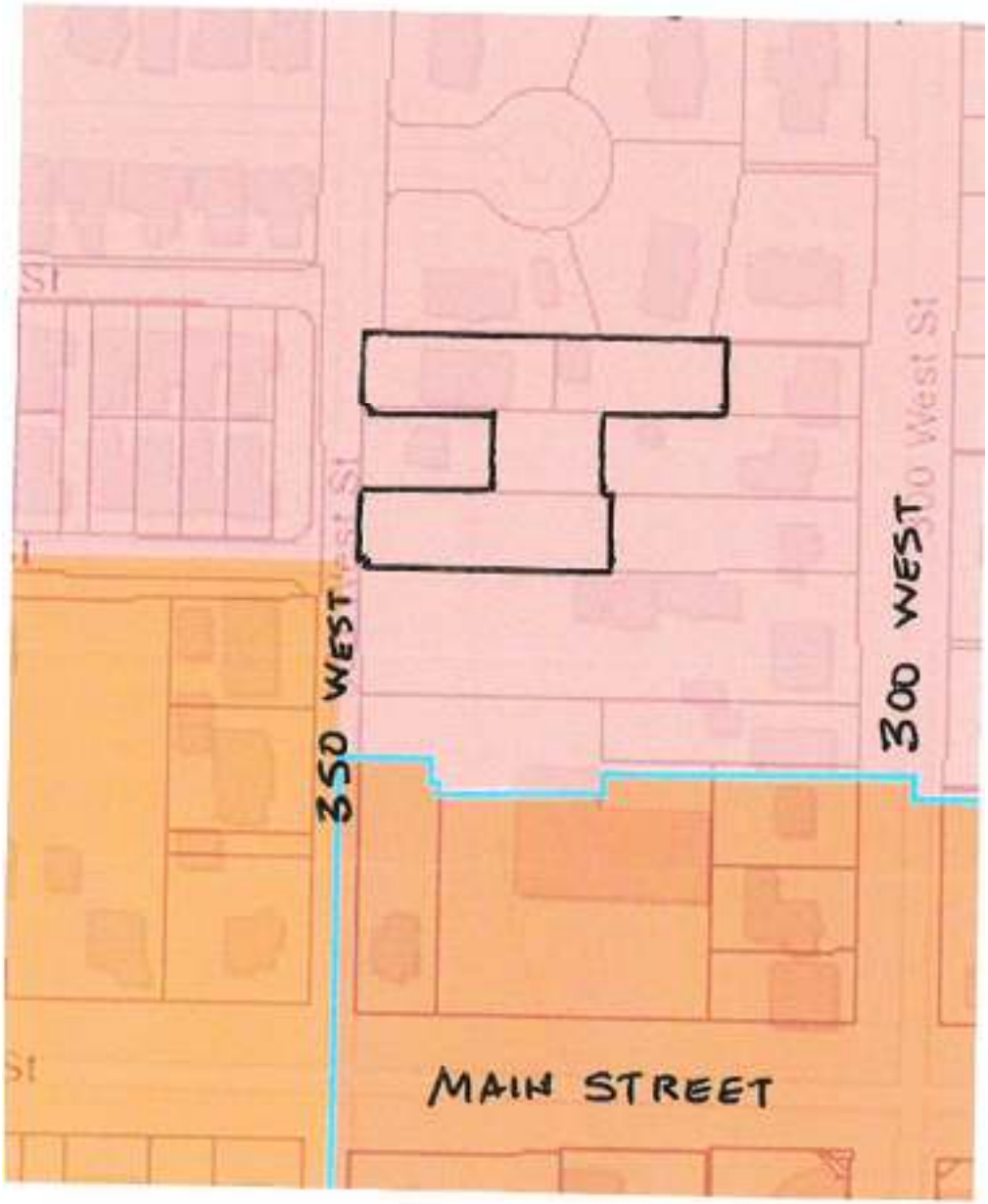

Figure 1. Land Use Types.

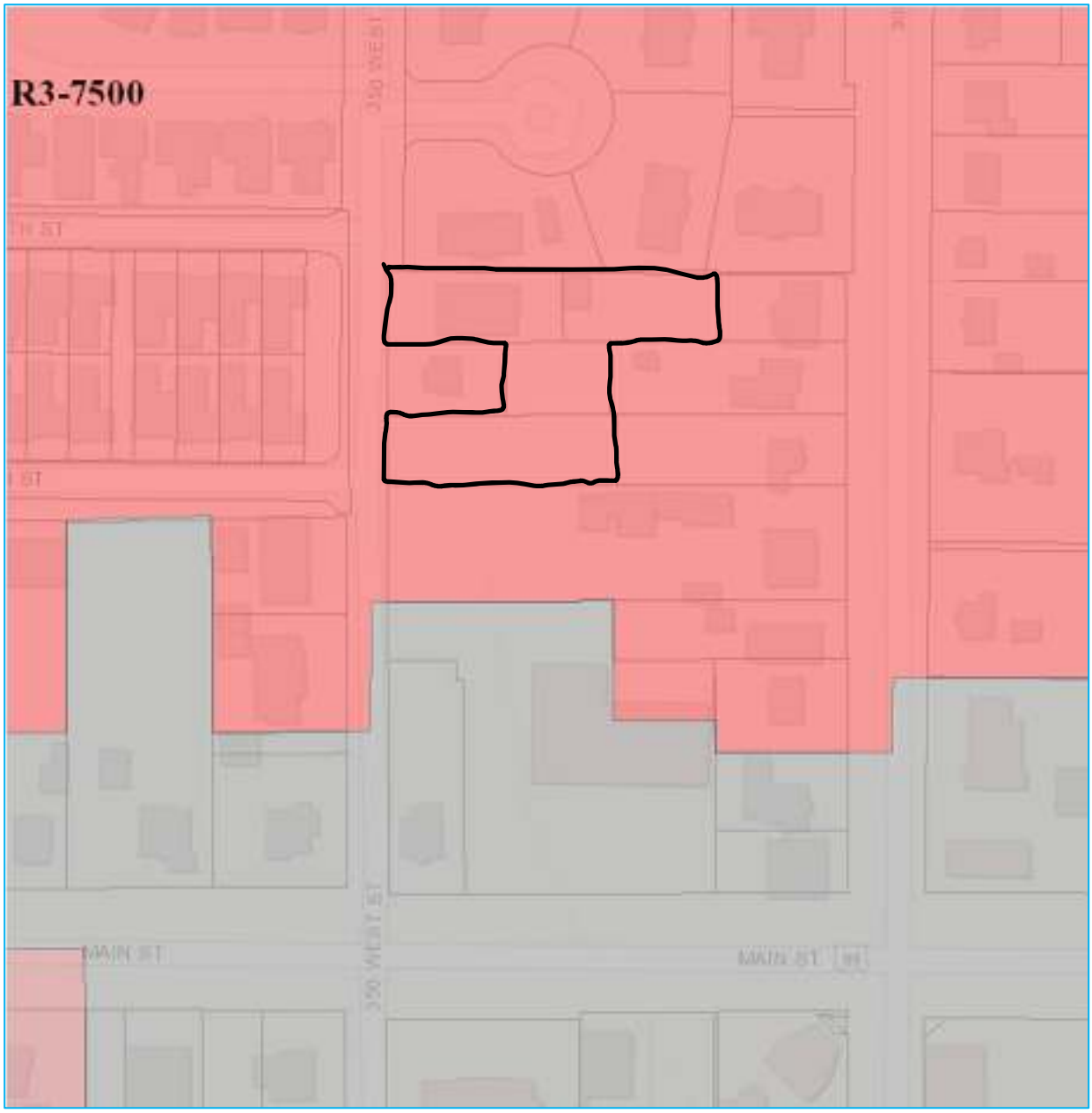

Figure 2. Zoning Types.

American Fork City
Development Review
Committee

PLANNING & ZONING REVIEWED
TVANEKELENBURG
3/6/23

LAND USE MAP AMENDMENT APPLICATION
01 MAR 2023
PROPERTY LOCATED ON 350 WEST
OWNED BY ABE PROPERTIES

JUSTIFICATION FOR CHANGE AND CHANGING CONDITIONS.

1. LAND USE MAP NEEDS TO MATCH PROPOSED ZONE CHANGE.
2. ZONE CHANGE REQUESTED BY OWNER FOR FOUR SMALL PARCELS TO BE USED FOR OFFICE BUILDING AND MORE PARKING FOR THEATER.
3. EXISTING BUILDING ON SITE IS CURRENTLY A THEATER/SPECIALTY SCHOOL. THIS CHANGE WILL BRING THE BUILDING USE INTO COMPLIANCE.
4. CITY COUNCIL REQUESTED THAT THIS APPLICATION ACCOMPANY THE ZONE CHANGE APPLICATION.
5. MORE CC-2 ZONE IS NEEDED TO ACCOMMODATE NUMEROUS SMALL BUSINESSES THAT ARE ANTICIPATED.
6. APPLICANT OWNS 4 SMALL PARCELS TO BE COMBINED FOR ONE SITE PLAN.

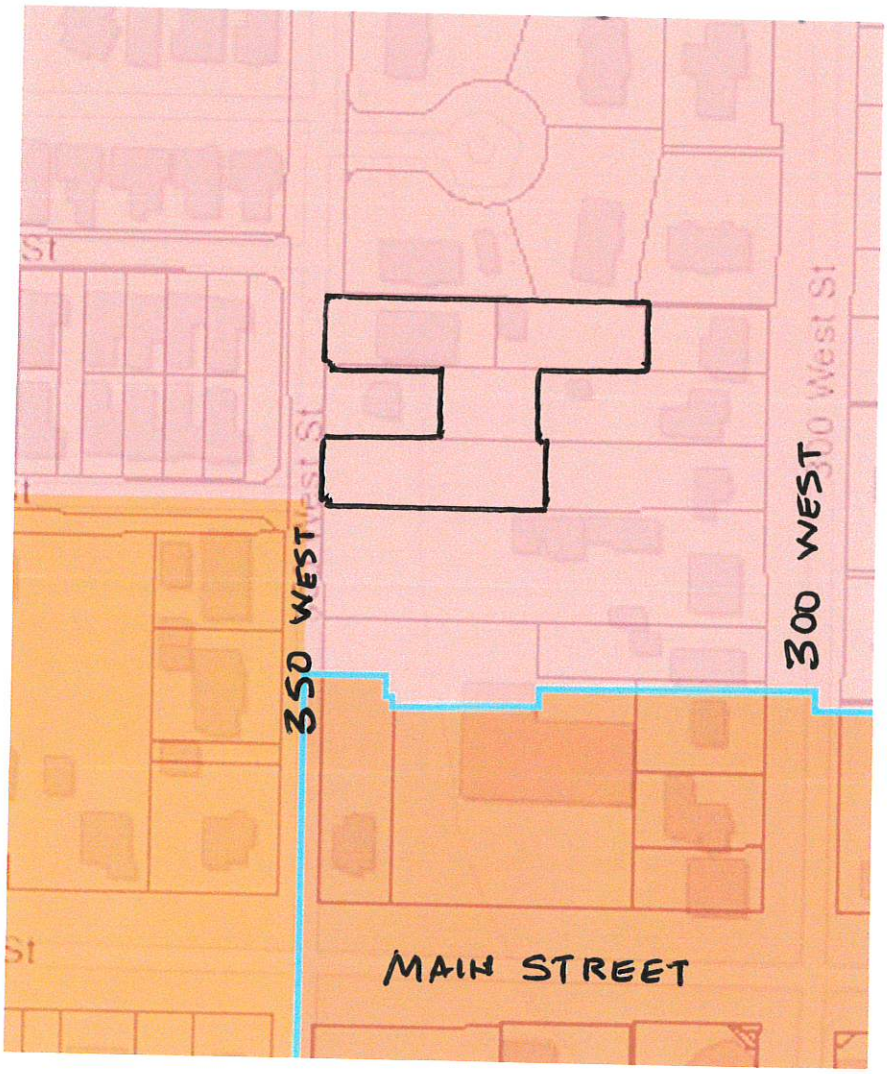

AMERICAN FORK CITY PLANNING COMMISSION **MEETING DATE:** March 22, 2023

AGENDA TOPIC:

Public hearing and recommendation on a proposed Land Use Map Amendment for approximately 0.60 acres of land located at approximately 401 West Main Street, from Design Commercial to the General Commercial Land Use designation.

BACKGROUND INFORMATION		
Location:		401 West Main Street
Applicants:		The Smith Family Trust 07-02-2012; Aaron Drussel
Existing Land Use:		Design Commercial
Proposed Land Use:		General Commercial
Surrounding Land Use:	North	Design Commercial
	South	Residential Medium Density
	East	Design Commercial
	West	Design Commercial
Existing Zoning:		R2-7500
Proposed Zoning:		N/A
Surrounding Zoning:	North	CC-2
	South	R2-7500
	East	CC-2
	West	CC-2

BACKGROUND:

The applicant is applying for a Land Use Map Amendment for the property located at approximately 401 West Main Street, from Design Commercial to the General Commercial land use designation. The entire parcel consists of 0.60 acres.

The General Commercial Land Use is applicable to the traditional commercial area of the City, which would include the Central Business District and areas in the vicinity of State Street and other major travel corridors currently designated for commercial purposes. As the property is fronting Main Street, a major travel corridor, the General Commercial Land Use designation would be applicable.

The applicant has provided a Zone Change application that is running concurrently with this Land Use Map Amendment. The Zone that they are proposing is the CC-2 zone. With

the CC-2 Zone Change proposal the Design Commercial Land Use would not be an appropriate fit as it is commonly used for shopping-center type of developments. One of the CC-2 Zone's intent is to facilitate the orderly development of property within and adjacent to the built-up central business area of the City for commercial purposes but to do so in a manner to minimize the adverse impacts of such commercial activity on existing residents and residential uses in the zone area.

As the Design Commercial Land Use is used for planned shopping-center type of developments and in areas which are being newly developed, the General Commercial Land Use would be more appropriate for this property fronting Main Street.

POTENTIAL MOTIONS – Land Use Map Amendment

APPROVAL

I move that we recommend approval of the Land Use Map Amendment for approximately 0.60 acres of land, located at approximately 401 West Main Street, from Design Commercial to the General Commercial Land Use designation, subject to any findings, conditions, and modifications found in the Staff Report, or recommended by the Fire Marshal.

DENIAL

I move that we deny of the Land Use Map Amendment for approximately 0.60 acres of land, located at approximately 401 West Main Street, from Design Commercial to the General Commercial Land Use designation.

TABLE

I move that we table action on the Land Use Map Amendment for approximately 0.60 acres of land, located at approximately 401 West Main Street, from Design Commercial to the General Commercial Land Use designation, and instruct the developer/staff to _____.

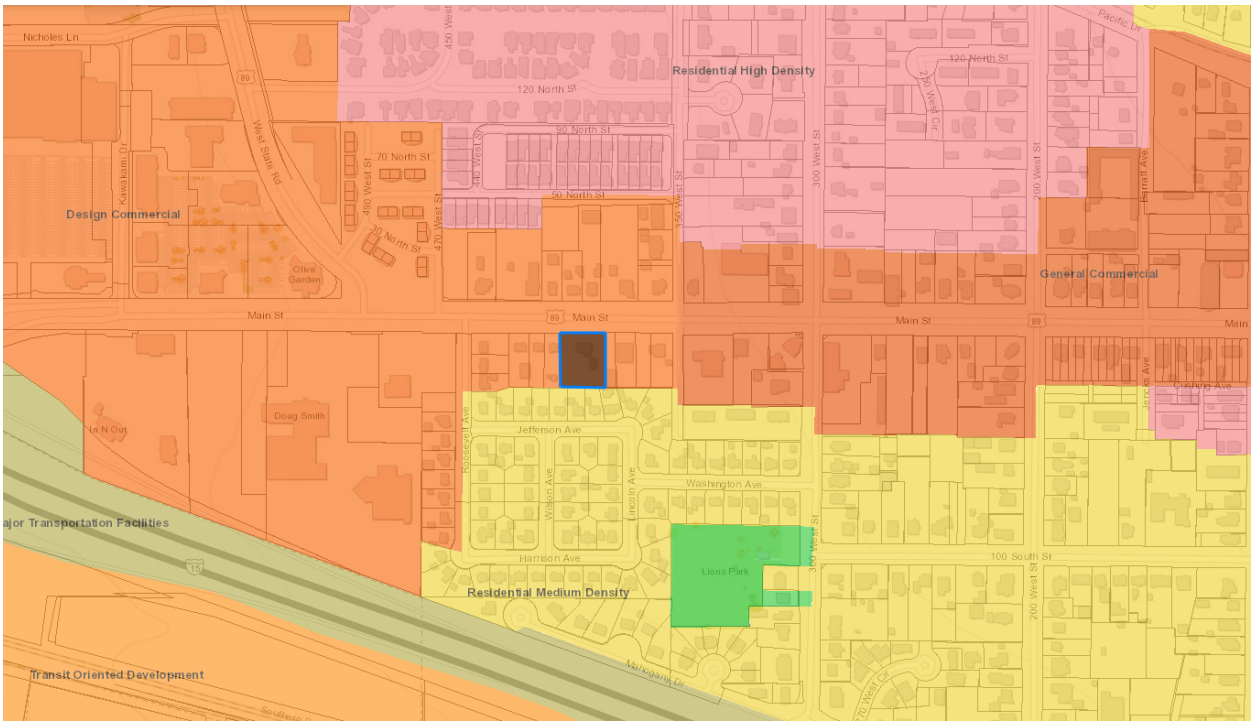

Figure 1. Land Use Types.

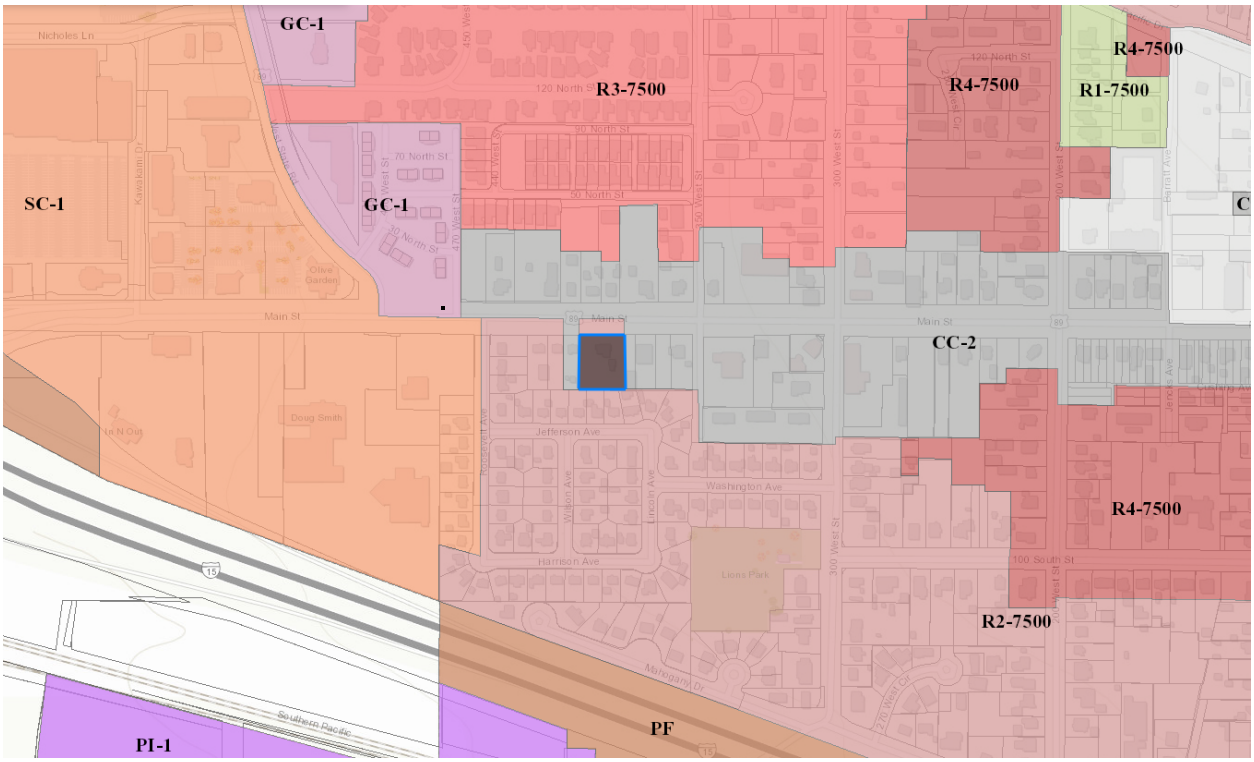

Figure 2. Zoning Types.

AMERICAN FORK CITY PLANNING COMMISSION **MEETING DATE:** March 22, 2023

AGENDA TOPIC:

Public hearing and recommendation on a proposed Zone Change for approximately 0.60 acres of land located at approximately 401 West Main Street, from the R2-7500 Residential Zone to the Central Commercial (CC-2) Zone.

BACKGROUND INFORMATION		
Location:		401 West Main Street
Applicants:		The Smith Family Trust 07-02-2012; Aaron Drussel
Existing Land Use:		Design Commercial
Proposed Land Use:		N/A
Surrounding Land Use:	North	Design Commercial
	South	Residential Medium Density
	East	Design Commercial
	West	Design Commercial
Existing Zoning:		R2-7500
Proposed Zoning:		CC-2
Surrounding Zoning:	North	CC-2
	South	R2-7500
	East	CC-2
	West	CC-2

BACKGROUND:

The applicant is applying for a Zone Change for the property located at approximately 401 West Main Street, from the R2-7500 Residential Zone to the Central Commercial (CC-2) Zone. The entire parcel consists of 0.60 acres.

One of the CC-2 Zone's intent is to facilitate the orderly development of property within and adjacent to the built-up central business area of the City for commercial purposes but to do so in a manner to minimize the adverse impacts of such commercial activity on existing residents and residential uses in the zone area.

POTENTIAL MOTIONS – Land Use Map Amendment

APPROVAL

I move that we recommend approval of the Zone Change for approximately 0.60 acres of land, located at approximately 401 West Main Street, from the R2-7500 Residential Zone to the Central Commercial (CC-2) Zone, subject to any findings, conditions, and modifications found in the Staff Report, or recommended by the Fire Marshal.

DENIAL

I move that we deny of the Zone Change for approximately 0.60 acres of land, located at approximately 401 West Main Street, from the R2-7500 Residential Zone to the Central Commercial (CC-2) Zone.

TABLE

I move that we table action on the Zone Change for approximately 0.60 acres of land, located at approximately 401 West Main Street, from the R2-7500 Residential Zone to the Central Commercial (CC-2) Zone, and instruct the developer/staff to _____.

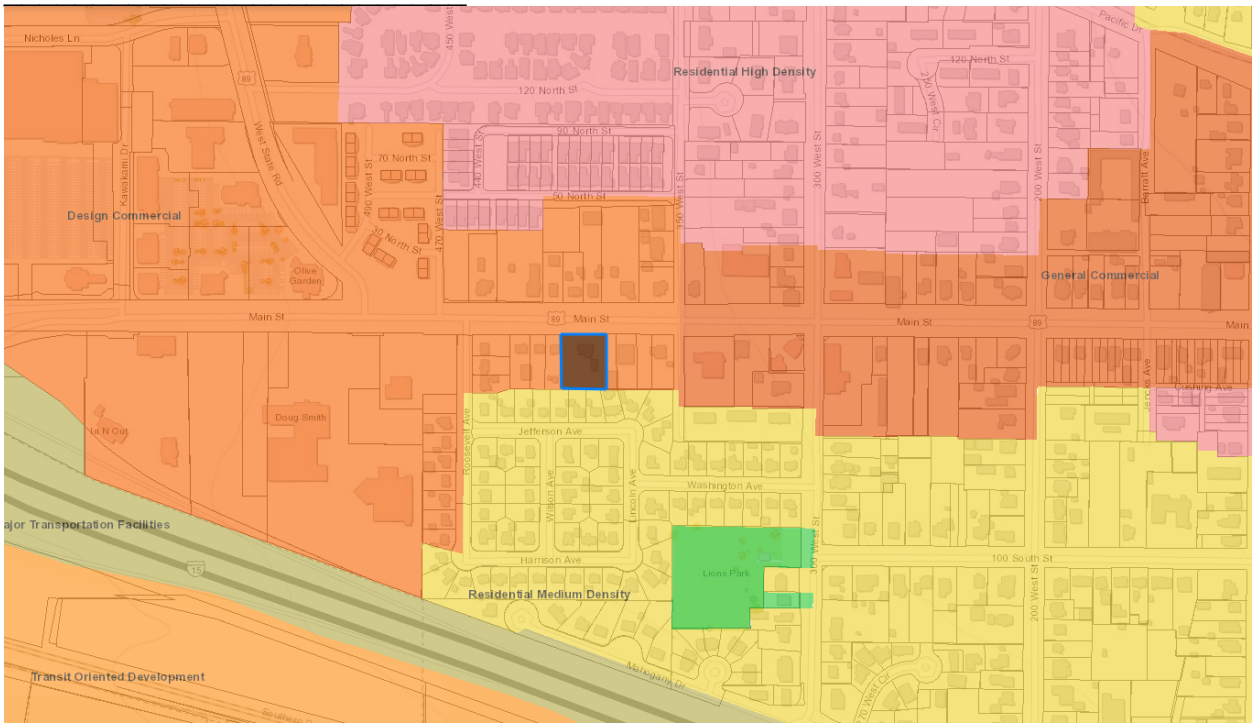

Figure 1. Land Use Types.

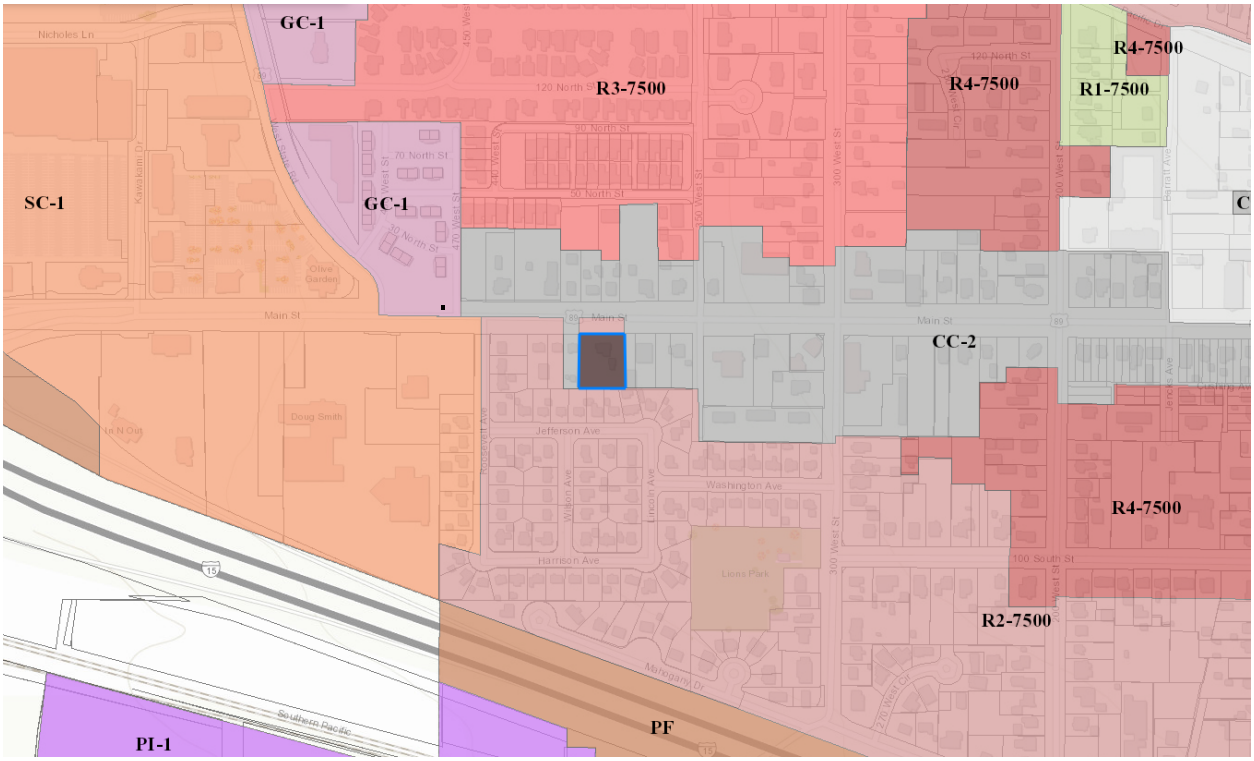

Figure 2. Zoning Types.

Measurement
Open Deed Points Page
Utah County 2021 Imagery | Utah County Government | Utah County GIS Divisi...
12:072:0078
12:072:0076
12:072:0074
13:046:0006
13:046:0005
13:046:0007
13:046:0036
13:046:0028
13:046:0029
13:046:0027
13:046:0030
36:105:0003
36:105:0004
36:105:0005
36:105:0500
36:105:0006
36:105:0007
36:105:0008
36:105:0009
36:105:0010
36:105:0011
36:105:0012
36:105:0013
36:105:0014
36:105:0015
36:105:0002
36:105:0001

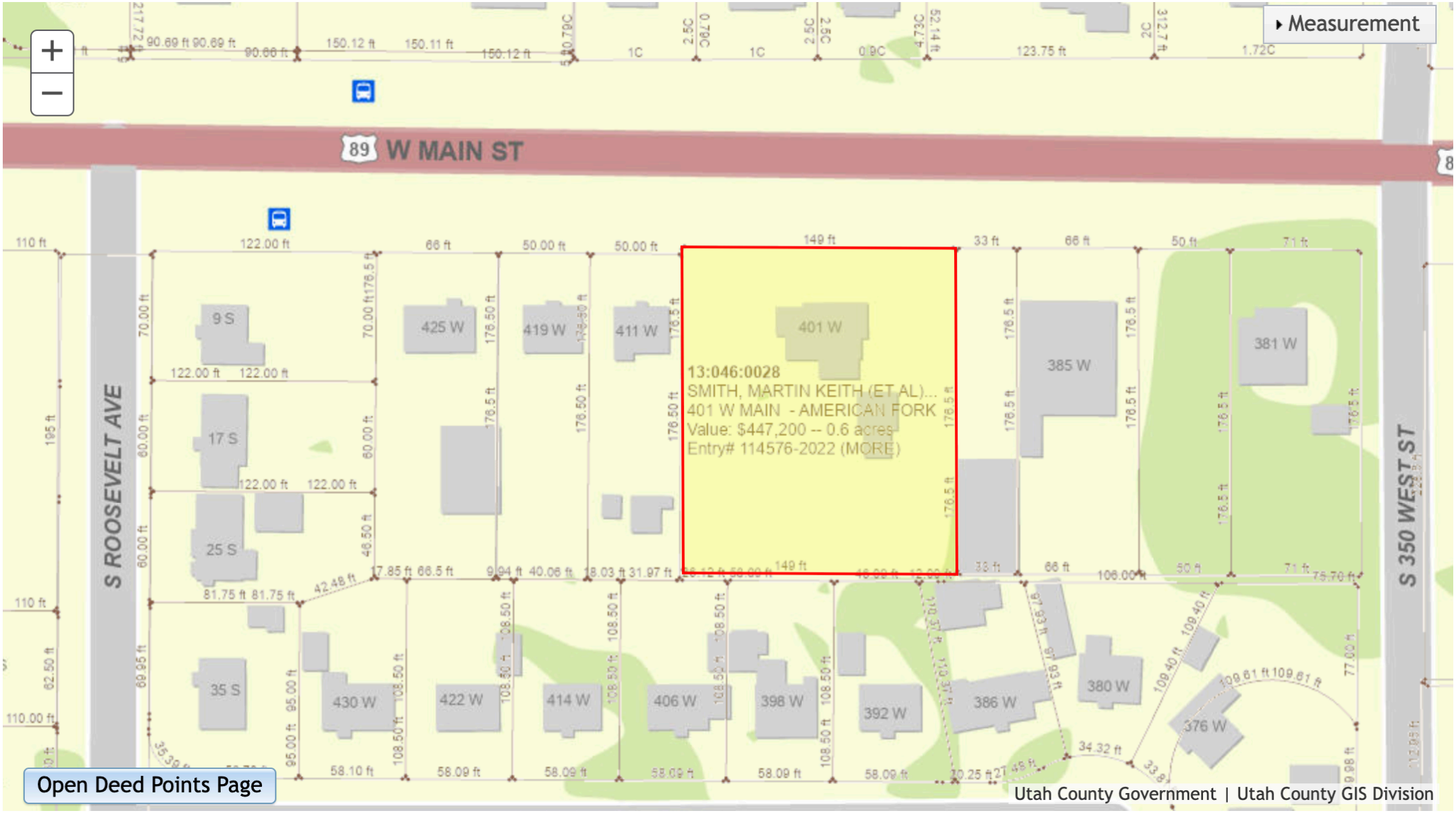
Measurement
89 W MAIN ST
S ROOSEVELT AVE
S 350 WEST ST
13:046:0028
SMITH, MARTIN KEITH (ET AL)...
401 W MAIN - AMERICAN FORK
Value: $447,200 -- 0.6 acres
Entry# 114576-2022 (MORE)
401 W
9 S
17 S
25 S
35 S
425 W
419 W
411 W
385 W
381 W
430 W
422 W
414 W
406 W
398 W
392 W
386 W
380 W
376 W
Open Deed Points Page
Utah County Government | Utah County GIS Division

AMERICAN FORK CITY **MEETING DATE:** March 22, 2023
PLANNING COMMISSION STAFF REPORT

AGENDA TOPIC:

Review and action on a Site Plan application for the Perfect Dress Project, located at 424 West Main Street, in the Central Commercial (CC-2) Zone.

BACKGROUND INFORMATION		
Location:		424 West Main Street
Project Type:		Site Plan
Applicants:		Dunn Davis Properties, LLC; TJ Davis
Existing Land Use:		Design Commercial
Proposed Land Use:		N/A
Surrounding Land Use:	North	Residential High Density
	South	Design Commercial
	East	Design Commercial
	West	Design Commercial
Existing Zoning:		CC-2
Proposed Zoning:		N/A
Surrounding Zoning:	North	R3-7500
	South	R2-7500
	East	CC-2
	West	CC-2

BACKGROUND:

The applicant is applying for Site Plan Approval for the Perfect Dress, for an improvement of a parking lot, located at 424 West Main Street. The proposal consists of 1 parcel for a parking lot and interior renovation of an existing building, the entire development parcel consists of approximately 0.80 acres. This has been brought to Planning Commission for a recommendation to City Council for their improvements to the parking lot.

Sec 17.6.101 Administrative Site Plan Review

Wherever the terms of this code require submission and approval of a site plan, such review shall be conducted in accordance with the following provisions.

1. Planning commission to approve. The planning commission, acting in an administrative capacity, shall have the function, duty and power to approve or disapprove a project plan and to attach such modifications or conditions as may be deemed appropriate to improve the layout, to ensure that the project will not pose any detrimental effect to persons or property, or to protect the health, safety, and general welfare of the citizens of the city.
2. Application required. Application for site plan approval shall be submitted on forms provided by the city and shall be accompanied by maps and drawings showing the following:
1. The location of all existing and proposed buildings and structures on the site, with full dimensions showing the distance between buildings and distances from buildings to adjacent property lines.
2. The location of all parking spaces, driveways, and points of vehicular ingress and egress.
3. A landscaping plan showing the location, types, and initial sizes of all planting materials to be used together with the location of fences, walls, hedges, and decorative materials.
4. Preliminary elevations of main buildings showing the general appearance and types of external materials to be used.
5. The locations of solid waste receptacles and trash pick-up areas.
3. Appeals permitted. Any person aggrieved by a determination of the planning commission may request a hearing before the city council who shall have the authority to reverse, affirm or modify any decision of said commission. Any such appeal shall be filed within ten days of the determination of the planning commission.
4. Issuance of a permit. A building permit shall not be issued for any building or structure or external alterations thereto until the provisions of this section have been complied with. Any construction not in conformance with an approved site plan shall be considered a violation of this code. Any building permit issued shall ensure that development is undertaken and completed in conformity with the plans as approved.

PROJECT MAP:

PROJECT CONDITIONS OF APPROVAL:

1. N/A

FINDINGS OF FACT:

- The application meets the requirements of Section 17.6.101

STANDARD CONDITIONS OF APPROVAL:

APPLICANT is responsible and shall submit/post/obtain all necessary documentation and evidence to comply with these Standard Conditions of Approval prior to any platting, permitting, or any other form of authorization by the City including plat recording or other property conveyance to the City and prior to scheduling a pre-construction meeting. All recording shall take place at the Utah County Recorder's Office.

1. **Title Report:** Submit an updated Title Report not older than 30 days or other type of appropriate verification that shows all dedications to the City are free and clear of encumbrances, taxes, or other assessments.
2. **Property Taxes and Liens:** Submit evidence that all the property taxes, for the current and/or previous years, liens, and agricultural land use roll over fees have been paid in full.

3. **Water Rights:** Submit evidence that all the required water rights have been conveyed to American Fork City.
4. **Performance Guarantee:** Post a performance guarantee for all required public and essential common improvements.
5. **Easements and Agreements:** Submit/record a long-term Storm Water Pollution Prevention Maintenance Agreement signed and dated by the property owner and any required easement documentation.
6. **Land Disturbance Permit:** Obtain a Land Disturbance Permit.
7. **Compliance with the Plan Review Comments:** All plans and documents shall comply with all the Technical Review Committee comments and the City Engineer's final review.
8. **Commercial Structure:** Record an Owner Acknowledgment and Utility Liability Indemnification if the proposed building is a multi-unit commercial structure served by a single utility service.
9. **Sensitive Lands:** Record all applicable documents required for compliance with the City's Sensitive Lands Ordinance.
10. **Utility Notification Form:** Submit a Subdivision Utility Notification Form.
11. **Professional Verification:** Submit final stamped construction documentation by all appropriate professionals.
12. **Fees:** Payment of all development, inspection, recording, streetlight, and other project related fees.
13. **Mylar:** Submit a Mylar. All plats will receive final verification of all formats, notes, conveyances, and other items contained on the plat by City staff (recorder, legal, engineer, GIS, planning).

STAFF RECOMMENDATION:

The Site Plan application meets the requirements of Section 17.6.101 and staff recommends APPROVING the application.

<u>POTENTIAL MOTIONS – Site Plan</u>

APPROVAL

I move that we approve the Site Plan application for the Perfect Dress Project, located at 424 West Main Street, in the Central Commercial (CC-2) Zone, subject to any conditions found in the Staff Report and recommended by the Fire Marshall.

DENIAL

I move that we deny the Site Plan application for the Perfect Dress Project, located at 424 West Main Street, in the Central Commercial (CC-2) Zone.

TABLE

I move that we table action on the Site Plan application for the Perfect Dress Project, located at 424 West Main Street, in the Central Commercial (CC-2) Zone, and instruct the developer/staff to _____.

THE PERFECT DRESS PARKING LOT

424 WEST MAIN STREET

AMERICAN FORK, UT

22-100-307-00

SHEET NO.
1

U.S. Standard Units
(Inch-Pound Units)

ALL UNITS IN FEET UNLESS OTHERWISE NOTED

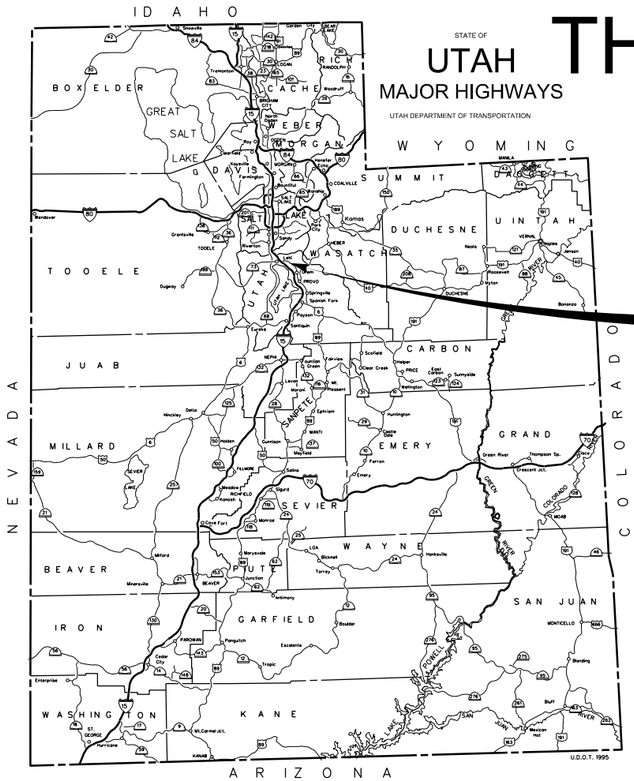

PROJECT LOCATION

AMERICAN FORK UTILITY CONTACTS

CULINARY WATER/P.I.	JAY BREMS	(801)763-3060
SEWER/STORM DRAIN	ASHTON HARDY	(801)763-3060
CITY INSPECTOR	DEE HOWARD	(801)763-3060
SWPPP INSPECTOR	HARLAN NIELSON	(801)763-3060
AMERICAN FORK FIRE MARSHAL	MAT SACCO	(801)763-3045
T.S.S.D.	DAVID BARLOW	(801)756-5231
AMERICAN FORK IRRIGATION COMPANY	ERNIE JOHN	(801)471-6576
MITCHELL HOLLOW IRRIGATION CO.	DALE JONES	(801)768-8150
ROCKY MOUNTAIN POWER	TERIA WALKER	(801)756-1310
COMCAST	ELYSIA VALDEZ	(801)401-3017
CENTURY LINK	BILL WESTFALL	(435)623-4252
AMERICAN FORK FIBER	KYLE PETERSON	(801)400-2933
DOMINION ENERGY	TRENT JOHNSON	(801)853-6548

No comments

American Fork City Development Review Committee
Planning and Zoning Reviewed COpperman 03/14/2023
Fire Department Reviewed M. Sacco 03/15/2023
Engineering Division Reviewed jhsu 03/15/2023

N

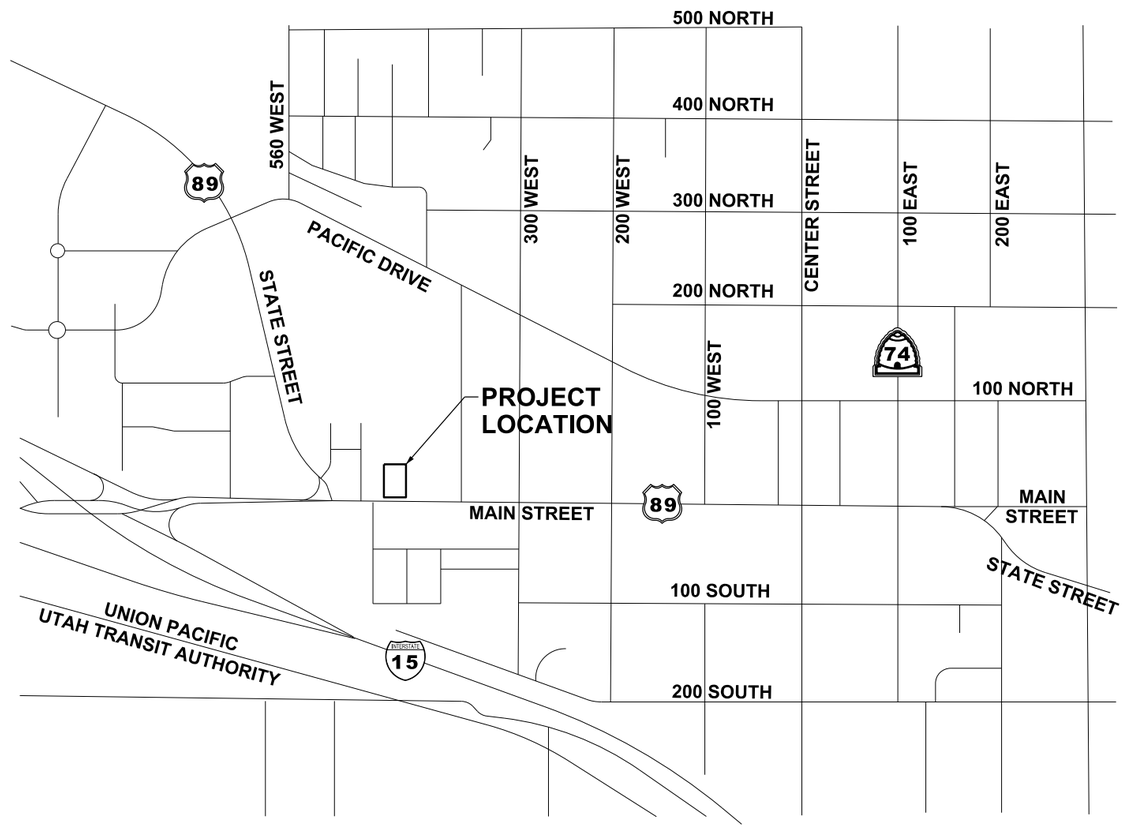

INDEX TO SHEETS

SHEET NUMBER	# OF SHEETS	SHEET TITLE
1	1	TITLE & INDEX TO SHEETS
TS-01	1	TYPICAL SECTION
RD-01	1	ROADWAY
RD-02	1	ADA RAMP AND SIGN DETAILS
UT-01	1	UTILITY
DT-01 TO DT-02	2	ROADWAY DETAIL
GR-01 TO GR-02	2	GRADING

FEMA FLOOD ZONE
FEMA FIRM MAP 49049C0168F
EFFECTIVE 6/19/2020
NO FLOODWAY DELINATED AT PROJECT LOCATION

THIS SEAL APPLIES TO ALL SHEETS CONTAINING THIS SIGNATURE

PROFESSIONAL ENGINEER
No. 270469
TRENT W. THATCHER
03/14/2023
ELECTRONIC SEAL
STATE OF UTAH

Know what's below.
Call 811 before you dig.

BLUE STAKES OF UTAH
UTILITY NOTIFICATION CENTER, INC.
www.bluestakes.org
1-800-662-4111

pw:\\wils-pw.bentley.com:wils-pw\Documents\8100-TRN\Misc Clients\22-100-307-00_The Perfect Dress Parking Lot Design\drawing files\Title Sheet
3/14/2023

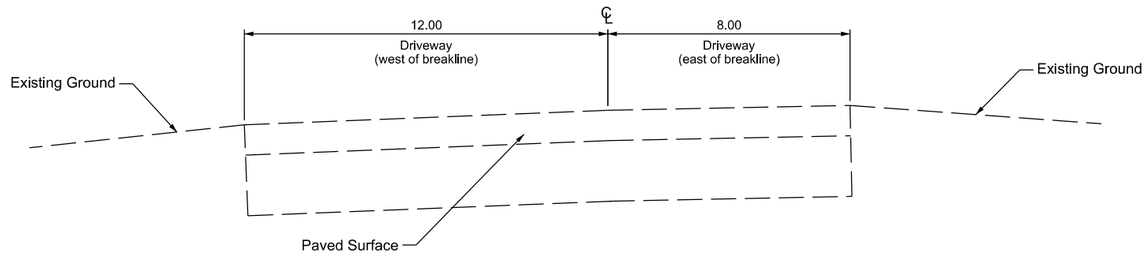

Existing Section 1

Driveway

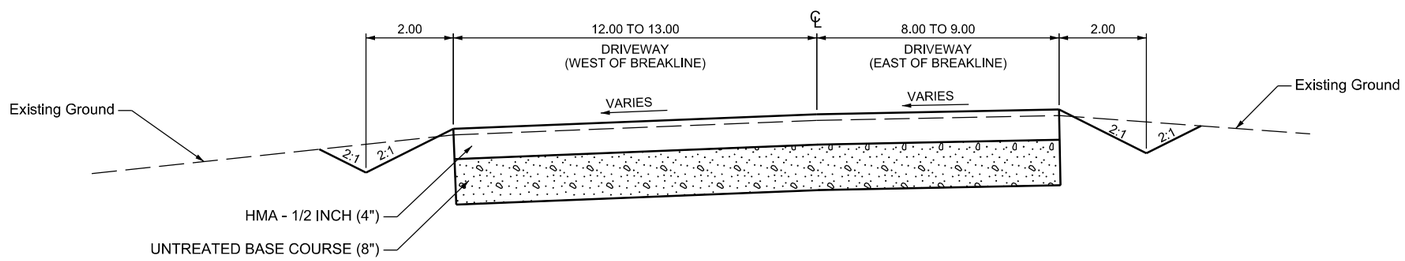

TYPICAL SECTION 1

DRIVEWAY

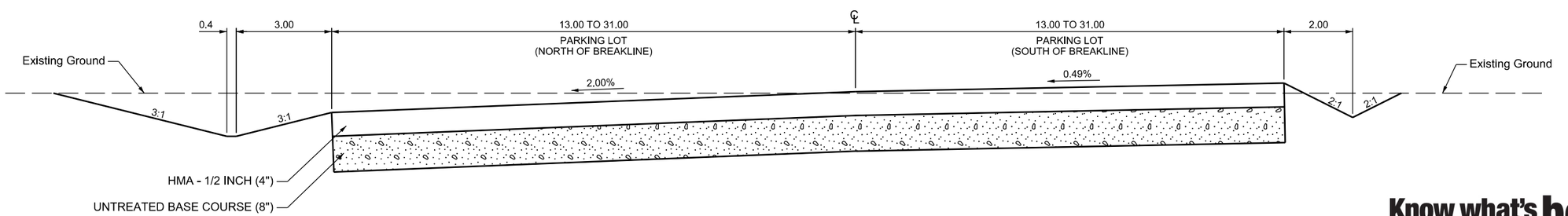

TYPICAL SECTION 2

PARKING LOT

Know what's **below.**
Call 811 before you dig.

BLUE STAKES OF UTAH
UTILITY NOTIFICATION CENTER, INC.
www.bluestakes.org
1-800-662-4111

10813 South River Front
Parkway, Suite 475
South Jordan, UT 84095
Phone (801) 307-2845

WILSON & COMPANY
ENGINEERS & ARCHITECTS

THE PERFECT DRESS
434 MAIN STREET AMERICAN FORK UT

DRAWN BY AAD
CHECKED BY TWT
DATE 03/14/2023
APPROVED

PROJECT: THE PERFECT DRESS
PARKING LOT DESIGN
AMERICAN FORK, UTAH
TYPICAL SECTION

PROJECT NUMBER

SHEET NO. TS-01

pw:\\wils-pw.bentley.com:wils-pw\Documents\8180-TRN\Misc Clients\22-180-387-00_The Perfect Dress Parking Lot Design\Drawing Files\Typical Section Sheet 01
3/14/2023

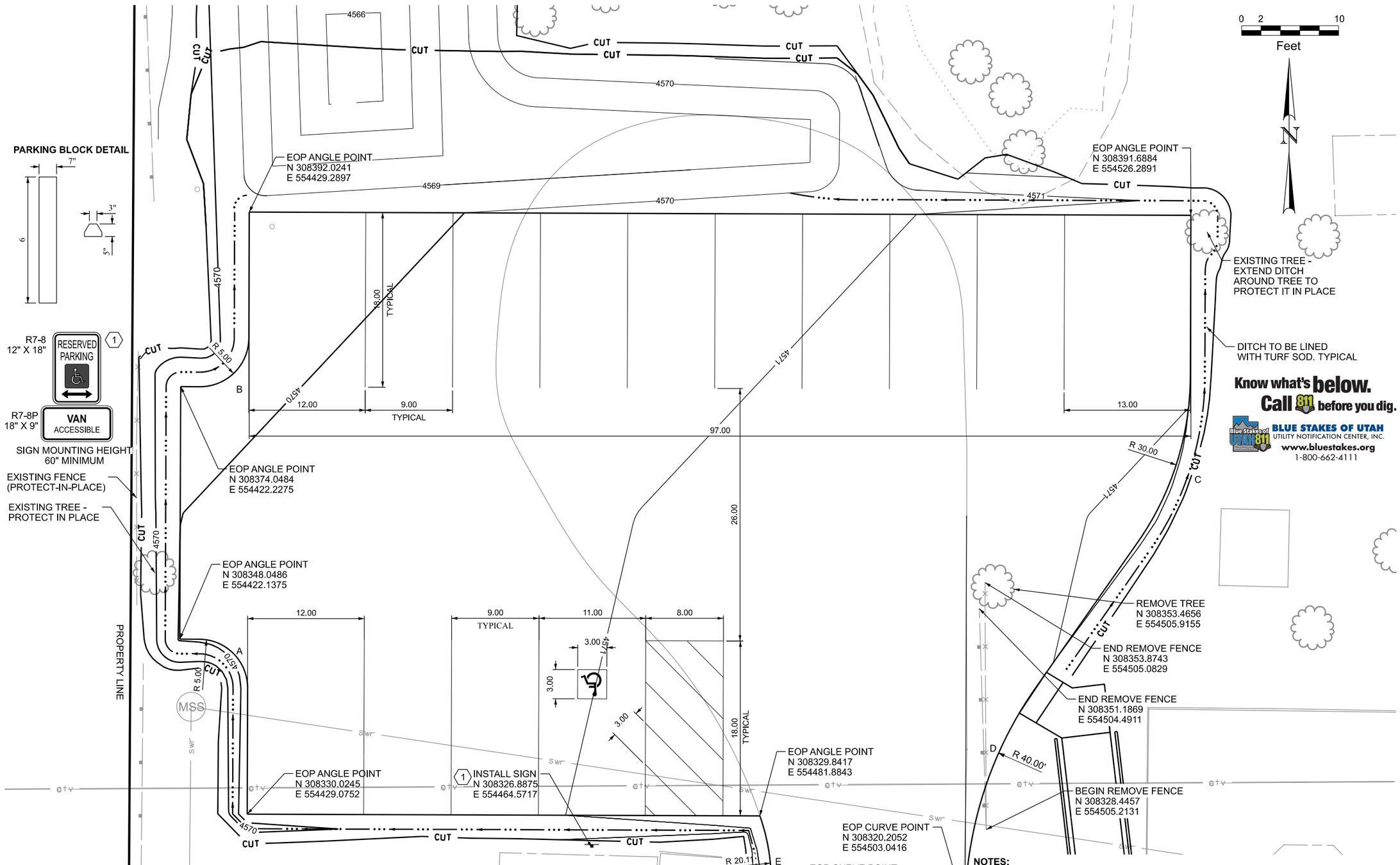

Know what's below. Call 811 before you dig.

BLUE STAKES OF UTAH
UTILITY NOTIFICATION CENTER, INC.
www.bluestakes.org
1-800-662-4111

CURVE DATA							
CURVE	PC		CC		PT		RADIUS
	NORTHING	EASTING	NORTHING	EASTING	NORTHING	EASTING	
A	308348.0417	554424.1375	308346.5650	554427.6679	308343.0244	554429.1201	5.00
B	308379.0242	554429.2447	308375.4937	554427.7680	308347.0415	554424.2275	5.00
C	308375.1138	554526.2318	308366.1657	554524.8338	308357.9797	554520.7851	30.00
D	308320.2052	554503.0416	308332.1847	554504.9211	308343.0506	554510.3039	40.00
E	308329.8417	554481.8833	308325.1200	554482.9560	308320.2750	554482.8678	20.11
F	308329.8238	554487.0748	308321.3659	554485.2197	308314.1808	554480.3876	23.16

NOTES:

1. SEE GR SHEET FOR GRADING DETAILS.
2. TOTAL COMMERCIAL FLOOR SPACE IS 3047 SQ FT. ORDINANCE NO. 2020-07-35 AMENDING SEC 17.5.133 OFF-STREET PARKING STANDARDS OF AMERICAN FORK CITY CODE REQUIRES 3.5 PARKING STALLS PER 1000 SQ FT. COMMERCIAL PROPERTY REQUIRED TO HAVE AT MINIMUM 11 PARKING STALLS. A TOTAL OF 14 PARKINGS STALLS ARE PROPOSED FOR THE PARKING LOT DESIGN WITH 1 PARKING STALL DESIGNATED FOR ACCESSIBLE PARKING.
3. PARKING STALLS TO BE STRIPED WITH WHITE PAINT AT 4 INCH WIDTH.
4. PARKING BLOCKS TO BE INSTALLED AT ALL PARKING STALLS.

WILSON & COMPANY
ENGINEERS & ARCHITECTS
10813 South River Front Parkway, Suite 475
South Jordan, UT 84095
Phone (801) 307-2845

THE PERFECT DRESS
434 MAIN STREET AMERICAN FORK UT

DRAWN BY: AAD
QC CHECKED BY: TWT
DATE: 03/14/2023
APPROVED

PROJECT: THE PERFECT DRESS
PARKING LOT DESIGN
AMERICAN FORK, UTAH
ROADWAY

PROJECT NUMBER

SHEET NO. RD-01

3/14/2023

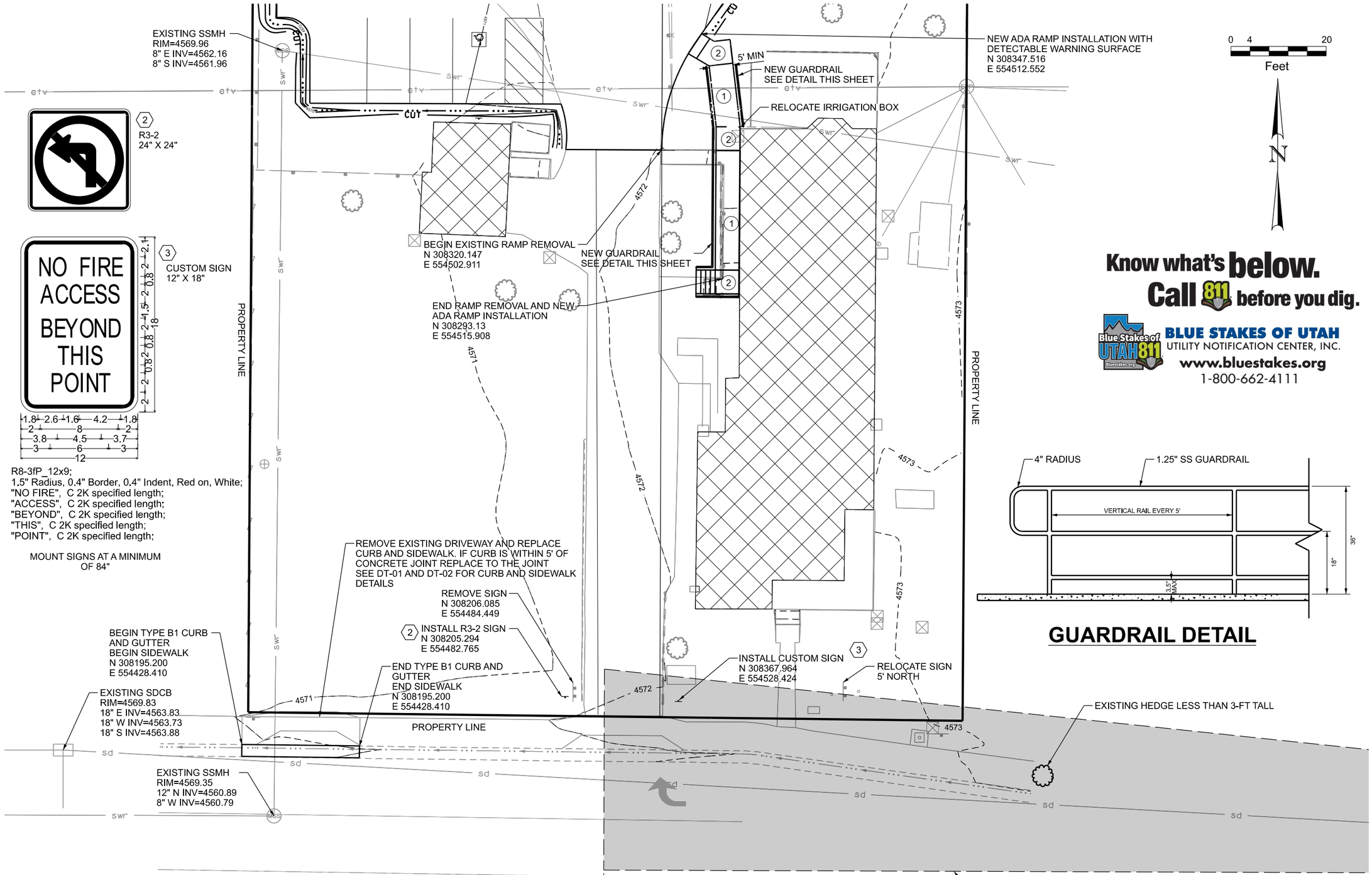

ADA RAMP NOTES:

1. RAMP TO HAVE A MAX RUNNING SLOPE OF 8.33% (1:12). RAMP TO HAVE MAX CROSS SLOPE OF 2.00% (1:48).
2. PROVIDE A 5' X 5' LANDING EVERY 30 INCHES OF RISE. RAMP LANDINGS TO HAVE A MAX SLOPE OF 2.00%
3. FOR ADDITIONAL ADA REQUIREMENTS SEE FEDERAL ADA STANDARDS.
4. CONTRACTOR SHALL FIELD VERIFY THE ACCESSIBLE ROUTE FROM THE ACCESSIBLE PARKING TO THE ADA RAMP. THE ROUTE SHALL NOT EXCEED A 5% RUNNING SLOPE AND A 2% CROSS SLOPE.

10813 South River Front Parkway, Suite 475
South Jordan, UT 84095
Phone (801) 307-2845
WILSON & COMPANY
ENGINEERS & ARCHITECTS

THE PERFECT DRESS
434 MAIN STREET AMERICAN FORK UT

DRAWN BY	ADD
QC CHECKED BY	TWT
DATE	03/14/2023
APPROVED	

PROJECT: THE PERFECT DRESS PARKING LOT DESIGN
PROJECT NUMBER: AMERICAN FORK, UTAH
ADA RAMP AND SIGN DETAILS

SHEET NO. RD-02

Ref files:grabenlay,commals:grav/Documents/8103-TRN/Misc Clients/22-103-307-03_The Perfect Dress Parking Lot Design/drawing Files/Roadway Sheet 02
3/14/2023

WILSON & COMPANY
ENGINEERS & ARCHITECTS
10813 South River Front Parkway, Suite 475
South Jordan, UT 84095
Phone (801) 307-2845

THE PERFECT DRESS
434 MAIN STREET AMERICAN FORK UT

DRAWN BY	ADD
QC CHECKED BY	TWT
DATE	03/14/2023
APPROVED	

PROJECT	THE PERFECT DRESS PARKING LOT DESIGN
PROJECT NUMBER	AMERICAN FORK, UTAH
	UTILITY

SHEET NO. UT-01

3/14/2023 pw:\\wilsonbentley.com\wilsonpw\Documents\8100-TRN\Misc Clients\22-102-307-00_The Perfect Dress Parking Lot Design\drawing Files\22114_UT-01

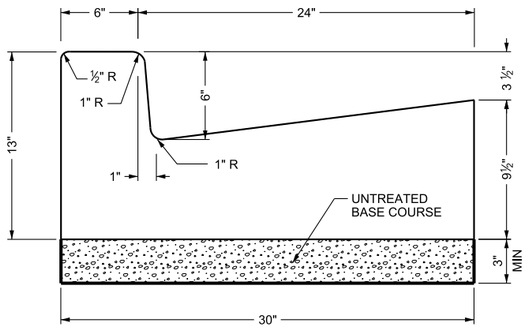

TYPE B1 CURB & GUTTER

AREA = 1.929 SQ FT

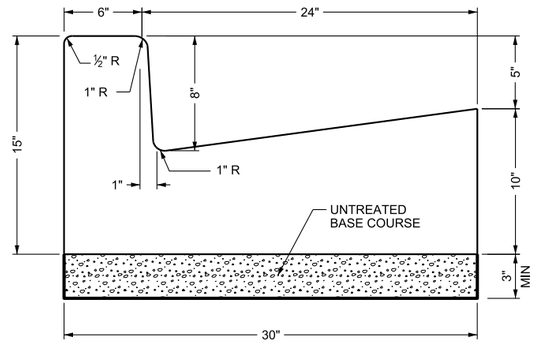

TYPE B2 CURB & GUTTER

AREA = 2.059 SQ FT

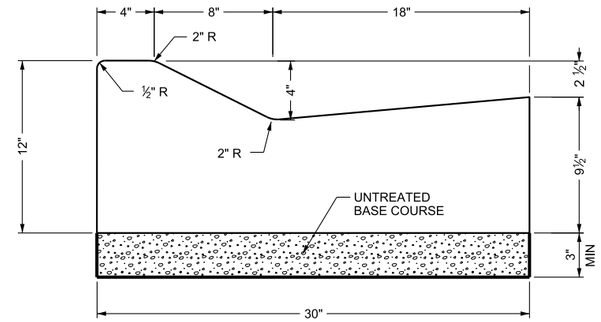

TYPE M1 CURB & GUTTER

AREA = 1.982 SQ FT

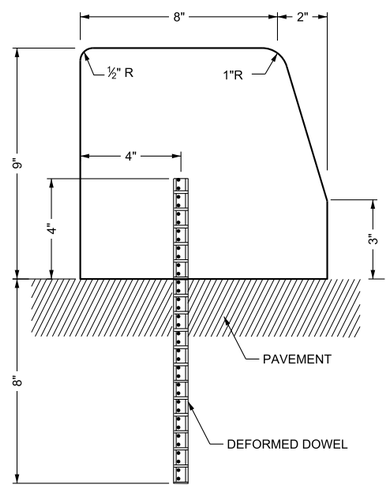

TYPE B3 CURB

AREA = 0.580 SQ FT

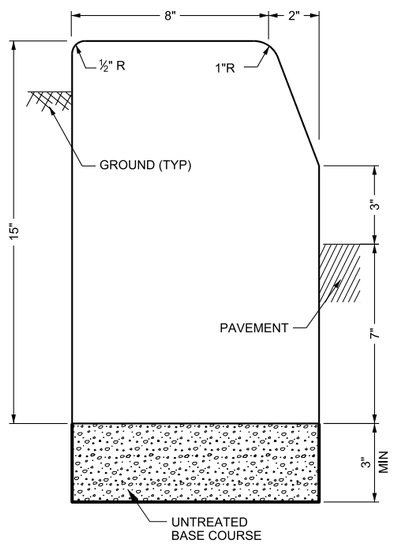

TYPE B4 CURB

AREA = 1.033 SQ FT

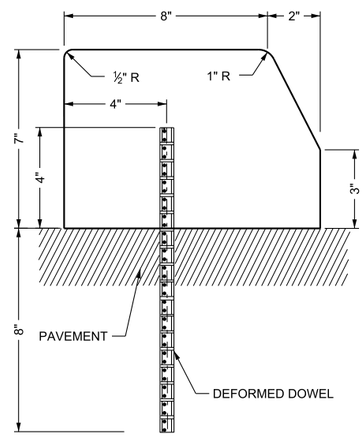

TYPE B5 CURB
RAISED MEDIAN

AREA = 0.490 SQ FT

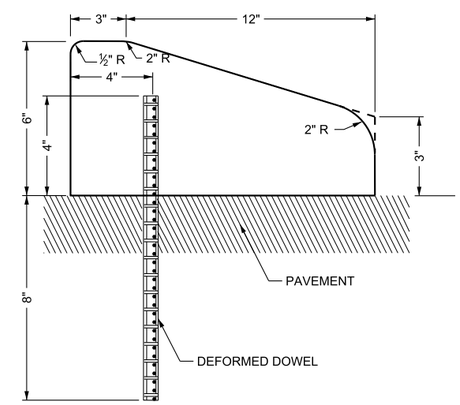

TYPE M2 CURB

AREA = 0.484 SQ FT

NOTES:

1. USE ¾ INCH DEFORMED DOWELS ON 5 FT MAXIMUM CENTERS.
2. PRECAST CURBS:
   A. MINIMUM OF 10 FT IN LENGTH.
   B. DOWELS AT A MINIMUM OF 3 PER 10 FT LENGTH.
   C. INCLUDE ADEQUATE REINFORCING STEEL TO WITHSTAND HANDLING STRESSES.
3. MEASURE CURB HEIGHT VERTICALLY FROM THE FLOW LINE OF THE GUTTER TO TOP BACK OF CURB.
4. REFER TO STD DWG GW 2B FOR CURB AND GUTTER AT ADA ACCESSES.

REVISIONS

NO.	DATE	APPR.	REMARKS
2	1/01/22	VAN	REMOVED DESIGN ONLY NOTES
1	8/31/17	CGW	LEVELED BOTTOM OF CURB AND GUTTER SECTIONS

UTAH DEPARTMENT OF TRANSPORTATION
STANDARD DRAWINGS FOR ROAD AND BRIDGE CONSTRUCTION
SALT LAKE CITY, UTAH

RECOMMENDED FOR APPROVAL — DATE

CHAIRMAN, STANDARDS COMMITTEE APPROVED — DATE

DEPUTY DIRECTOR — DATE

2023 Standard Drawing

CONCRETE
CURB AND GUTTER
TYPES

STANDARD DRAWING TITLE

STD. DWG. NO.
GW 2A

10813 South River Front
Parkway, Suite 475
South Jordan, UT 84095
Phone (801) 307-2845

WILSON & COMPANY
ENGINEERS & ARCHITECTS

THE PERFECT DRESS
434 MAIN STREET AMERICAN FORK UT

APPROVED

FOR INFORMATION ONLY — DATE

DRAWN BY: ADD
QC CHECKED BY: TWT

PROJECT: THE PERFECT DRESS
PARKING LOT DESIGN
AMERICAN FORK, UTAH
ROADWAY DETAIL

PROJECT NUMBER

SHEET NO. DT-01

Know what's below.
Call 811 before you dig.

BLUE STAKES OF UTAH
UTILITY NOTIFICATION CENTER, INC.
www.bluestakes.org
1-800-662-4111

pw:\\wilsonbentley.com\wilsonpw\Documents\8180-TRN\Misc Clients\22-180-307-00_The Perfect Dress Parking Lot Design\drawing files\Details Sheet 01
le:D:\StandardsandSpecsSection\2023 Standards (pub Spring 2023)\Electronic Books\Master Drawings\GW02A.dgn
3/14/2023

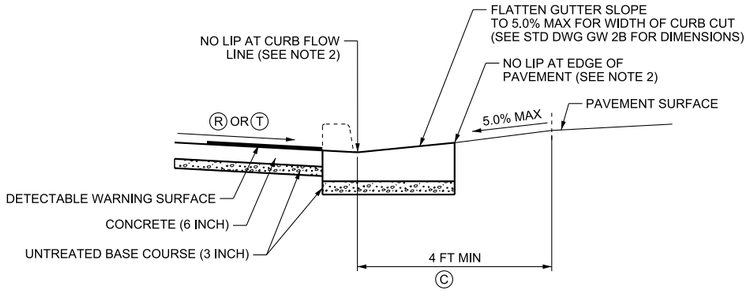

CLEAR SPACE
DETAIL A

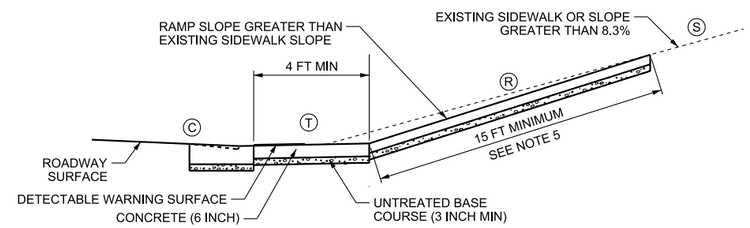

RAMP SLOPE STEEPENED TO MATCH EXISTING GRADE

RAMP RUNNING SLOPE EXCEPTION
DETAIL D

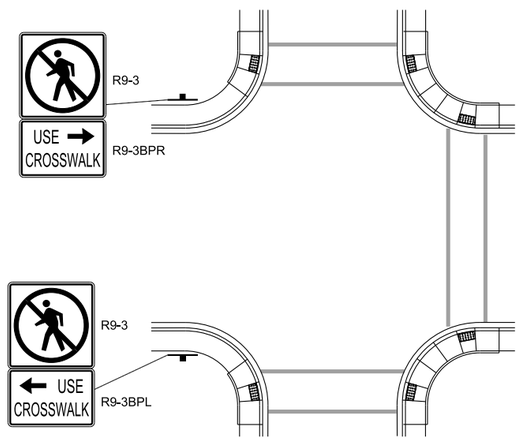

SIGNING FOR PROHIBITED PEDESTRIAN CROSSING
DETAIL B

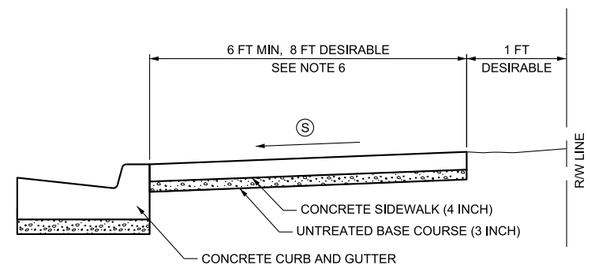

NO PARKSTRIP
DETAIL E

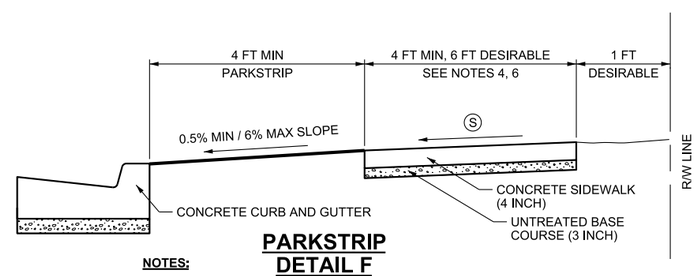

PARKSTRIP
DETAIL F

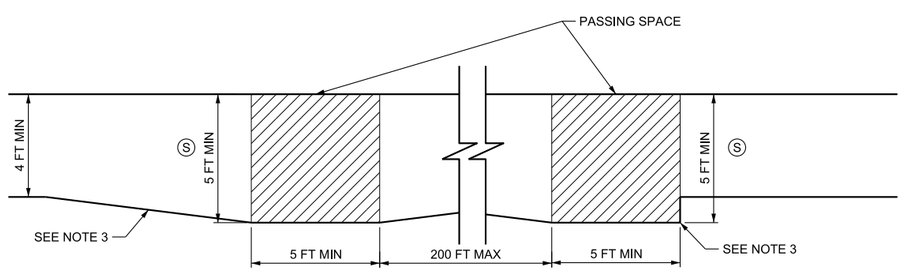

PASSING SPACE
DETAIL C

SEE NOTE 4

NOTES:

1. REFER TO STD DWG PA 1 FOR DIMENSION TABLE AND GENERAL NOTES.
2. SEE STD DWG PA 1, NOTE 6 FOR VERTICAL DIFFERENCE ALLOWANCES OR TREATMENTS.
3. FLARE AT A RATE EQUAL TO THE PANEL WIDTH TO ALLOW TRANSITIONS ACROSS WHOLE PANELS WHEN A TAPER RATE IS USED TO TRANSITION FROM AND TO A PASSING SPACE. USE A 5:1 FLARE RATE FOR A 5 FT WIDE SIDEWALK FOR EXAMPLE. TAPER RATE MAY BE MODIFIED OR OMITTED WHERE SITE CONDITIONS PROHIBIT USE.
4. SIDEWALK WIDTH IS EXCLUSIVE OF THE WIDTH OF THE CURB. PROVIDE 5 FT X 5 FT PASSING SPACES AT 200 FT MAX. INTERVALS WHERE SIDEWALK WIDTH IS LESS THAN 5 FT (PROWAG R302.3 - R302.4). DRIVEWAYS AND OTHER PAVED AREAS MAY BE USED AS A PASSING SPACE WHERE A MINIMUM 5 FT WIDE AREA MEETING SIDEWALK REQUIREMENTS IS PROVIDED.
5. WHEN THE SIDEWALK OR STREET SLOPE IS GREATER THAN 8.3% AND THE 8.3% MAXIMUM RAMP RUNNING SLOPE CAN NOT BE MET IN 15 FT OF THE ADJACENT TURNING SPACE EDGE, THEN STEEPEN THE RAMP FOR AT LEAST 15 FEET OR TO THE NEXT FURTHER JOINT BEYOND 15 FEET (PROWAG R304.2.2, R304.3.2). THIS WILL RESULT IN THE RAMP RUNNING SLOPE EXCEEDING THE ORIGINAL SIDEWALK OR STREET SLOPE ABOVE 8.3% AND IS ACCEPTABLE. WHERE THE SIDEWALK IS ATTACHED TO THE CURB AND GUTTER, ADJUST THE CURB HEIGHT TO MATCH THE SURFACE ELEVATION OF THE STEEPENED RAMP.
6. THE FOLLOWING MINIMUM WIDTHS ARE REQUIRED FROM BACK OF CURB TO BACK OF SIDEWALK AT DRIVEWAY LOCATIONS TO MEET GRADING REQUIREMENTS:
   - TYPE B1 CURB AND GUTTER: 7.67 FT
   - TYPE B2 CURB AND GUTTER: 9.75 FT
   - TYPE M2 CURB AND GUTTER: 5.08 FT

REVISIONS

NO.	DATE	APPR.	REMARKS
3	2/17/22	TRE	UPDATED RAMP RUNNING SLOPE DETAIL, NOTE 5, AND CLEAR SPACE DETAIL
2	2/28/19	CGW	MARKING FOR UTBC AND CONCRETE REVISED, REFERENCE IN DT F UPDATED
1	2/22/18	CGW	NEW DRAWING

UTAH DEPARTMENT OF TRANSPORTATION
STANDARD DRAWINGS FOR ROAD AND BRIDGE CONSTRUCTION
SALT LAKE CITY, UTAH

RECOMMENDED FOR APPROVAL — DATE
CHAIRMAN STANDARDS COMMITTEE APPROVED — DATE
DEPUTY DIRECTOR

2023 Standard Drawing

PEDESTRIAN ACCESS DETAILS
STANDARD DRAWING TITLE

STD. DWG. NO.
PA 3

WILSON & COMPANY
ENGINEERS & ARCHITECTS
10813 South River Front Parkway, Suite 475
South Jordan, UT 84095
Phone (801) 307-2845

THE PERFECT DRESS
434 MAIN STREET AMERICAN FORK UT

DRAWN BY ADD
QC CHECKED BY TWT
DATE

APPROVED
FOR INFORMATION ONLY

PROJECT: THE PERFECT DRESS
PARKING LOT DESIGN
PROJECT NUMBER: AMERICAN FORK, UTAH
ROADWAY DETAIL

SHEET NO. DT-02

Know what's below.
Call 811 before you dig.
BLUE STAKES OF UTAH
UTILITY NOTIFICATION CENTER, INC.
www.bluestakes.org
1-800-662-4111

DGN File:D:\Standards\SpecSection\2023 Standards (pub. Spring 2022)\Electronic Books\Master Drawings\Drawings\PA 03.dgn
pw:\\wilsonandcompany.pw\Documents\8100-TRN\Misc Clients\22-100-307-00_The Perfect Dress Parking Lot Design\drawing Files\Details Sheet 01
3/14/2023

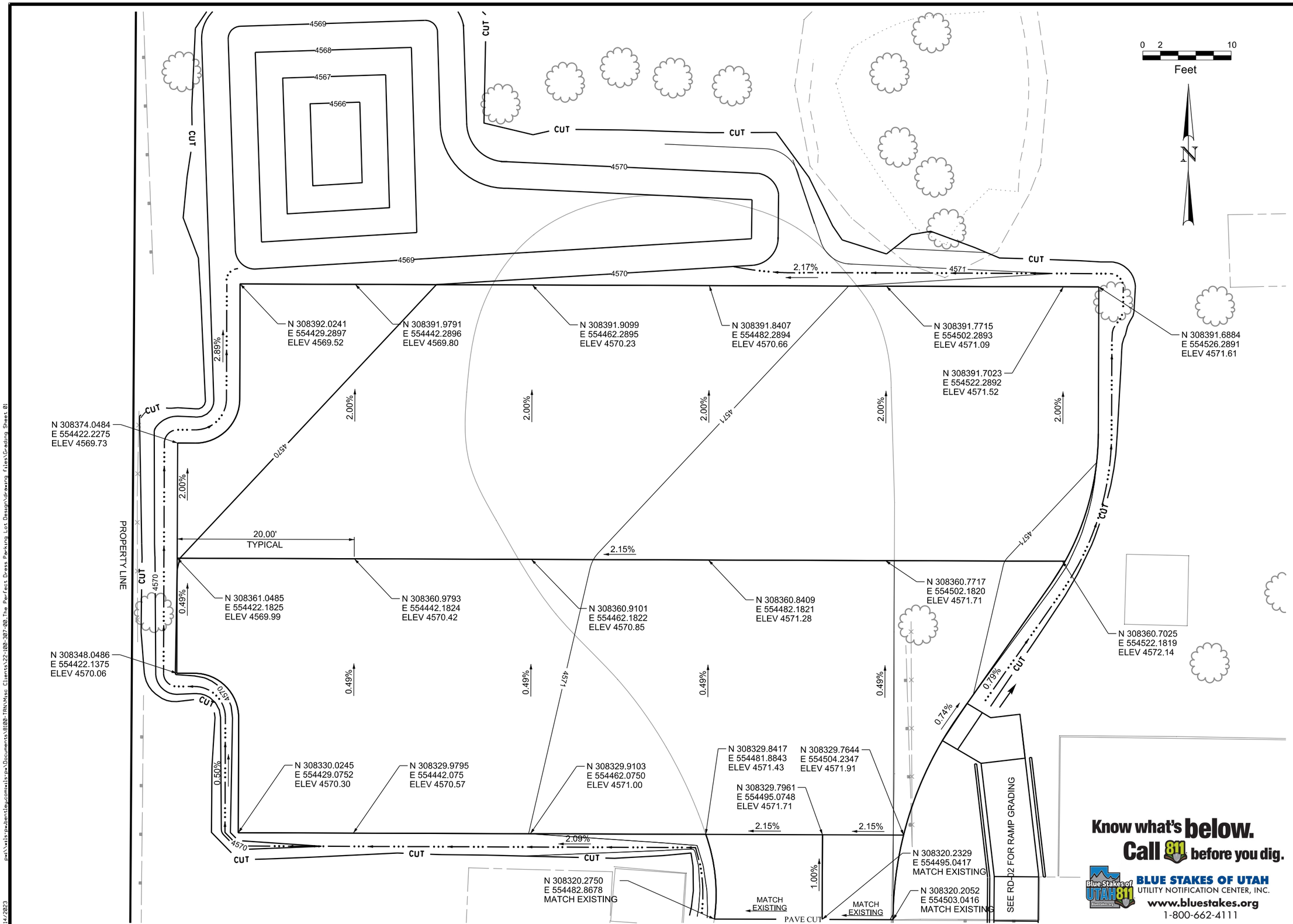

WILSON & COMPANY
ENGINEERS & ARCHITECTS
10813 South River Front Parkway, Suite 475
South Jordan, UT 84095
Phone (801) 307-2845

THE PERFECT DRESS
434 MAIN STREET AMERICAN FORK UT

DRAWN BY	AAD
QC CHECKED BY	TWT
DATE	03/14/2023
APPROVED	

PROJECT: THE PERFECT DRESS
PARKING LOT DESIGN
AMERICAN FORK, UTAH
GRADING

PROJECT NUMBER:

SHEET NO. GR-01

3/14/2023 pw:\\wils-pw.bentley.com:wils-pw\Documents\8100-TRN\Misc Clients\22-100-397-00 The Perfect Dress Parking Lot Design\Drawing Files\Grading Sheet 01

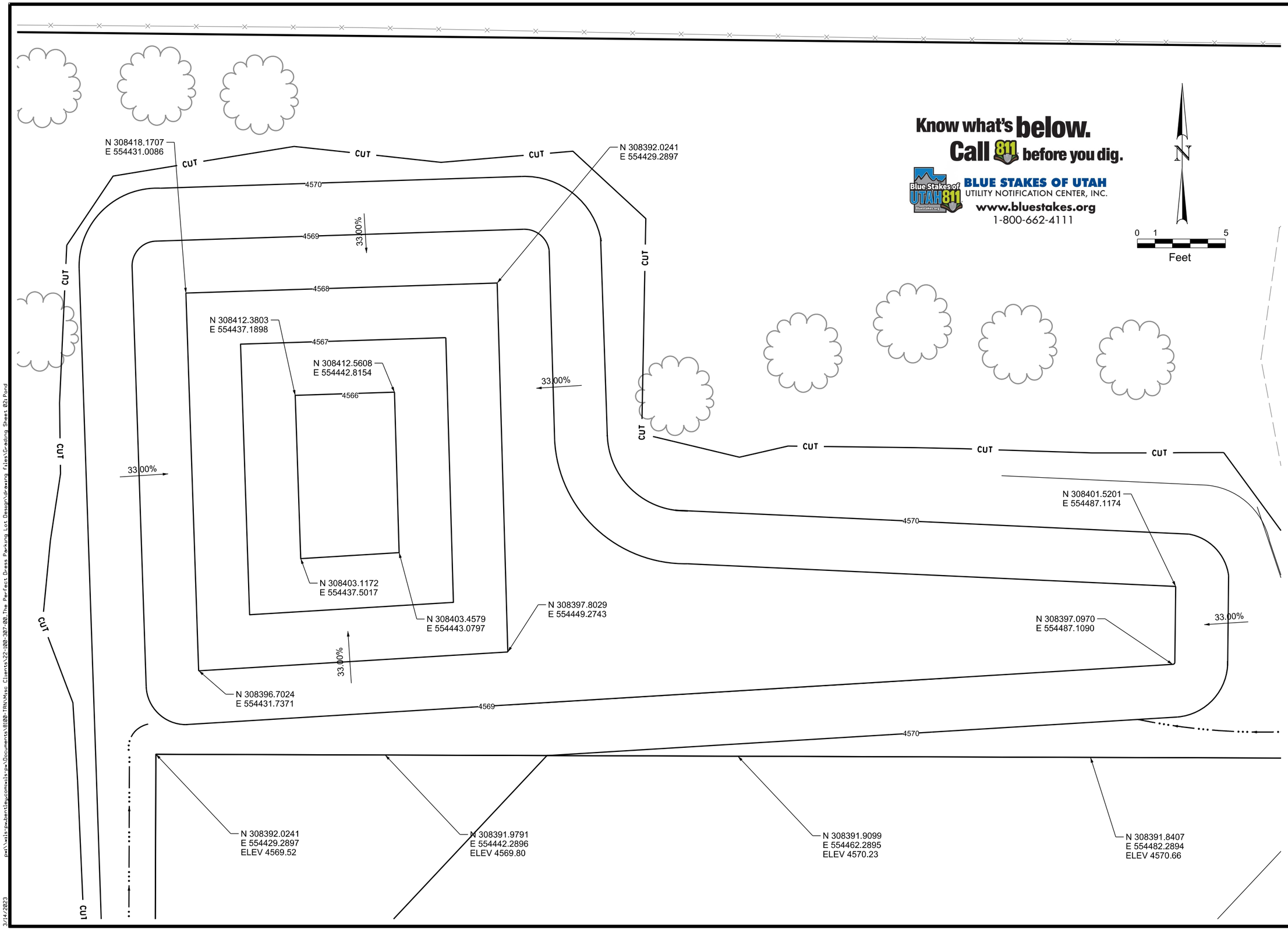

WILSON & COMPANY
ENGINEERS & ARCHITECTS
10813 South River Front Parkway, Suite 475
South Jordan, UT 84095
Phone (801) 307-2845

THE PERFECT DRESS
434 MAIN STREET AMERICAN FORK UT

DRAWN BY	ABC
QC CHECKED BY	TWT
DATE	03/14/2023
APPROVED	

PROJECT: THE PERFECT DRESS
PARKING LOT DESIGN
AMERICAN FORK, UTAH
GRADING

PROJECT NUMBER

SHEET NO. GR-02

3/14/2023

AMERICAN FORK CITY **MEETING DATE:** March 22nd, 2023
PLANNING COMMISSION STAFF REPORT

AGENDA TOPIC:

Review and action on an application for an accessory structure in excess of 1,000 square feet, located in the area of 33 East 100 North in the Residential (R4-7500) Zone.

BACKGROUND INFORMATION		
Location:		33 East 100 North
Project Type:		Accessory Structure Site Plan
Applicants:		Adam Anderson
Existing Land Use:		Residential High Density
Proposed Land Use:		N/A
Surrounding Land Use:	North	Residential High Density
	South	Institutional Lands, Schools, and Public Facilities
	East	Residential High Density; General Commercial
	West	Residential High Density; General Commercial
Existing Zoning:		R4-7500
Proposed Zoning:		N/A
Surrounding Zoning:	North	R4-7500
	South	CC-1
	East	CC-1
	West	R4-7500; CC-1

BACKGROUND:

The applicant is applying for site plan approval for the development of an accessory structure in the R4-7500 Zone, located at 33 E 100 N. The proposal consists of 1 parcel for an addition to an existing accessory structure. The entire development parcel consists of 0.30 acres. The accessory structure exceeds the 1000 square foot requirement to be brought to the Planning Commission and Planning Commission will be the approval body for this structure.

Sec 17.5.105 Area Of Accessory Buildings

Accessory buildings shall not be larger than an area two times the size of the footprint (foundation) of the primary structure; or cover more than twenty-five percent of the total rear yard area of a lot, whichever is less. All accessory buildings shall be of a character which is consistent and compatible with the bulk, height, style and construction materials of existing dwellings in the immediate vicinity. There shall be no signage on any portion of the accessory building and the area surrounding the accessory building shall be landscaped. An accessory building containing a building footprint of one thousand square feet or larger shall require approval of the planning commission, subject to the following findings: (1) the accessory building will be incidental to the primary use of the parcel, (2) the applicant has provided adequate assurance that neither the accessory building nor any portion thereof will be used or converted for use as living or sleeping quarters (see Section 17.5.106) or for the conduct of a business (except when located in a commercial zone permitting such activity), and (3) the bulk, height, style and construction material of the accessory structure is compatible with dwellings in the immediate vicinity and will not result in an undue negative impact upon adjacent properties.

PROJECT MAP:

PROJECT CONDITIONS OF APPROVAL:

1. All Fire Marshall comments will need to be addressed before permits are approved.
2. Provide grading for the project site. Ensure all storm water is retained on site.

FINDINGS OF FACT:

- The Accessory Structure addition meets the requirements of Section 17.5.105 of American Fork City Code.
- Applicant will need to sign a document stating that the accessory building will be incidental to the primary use of the parcel, the accessory building nor any portion thereof will not be used or converted for use as living or sleeping quarters, and the accessory building will not be used for the conduct of a business.

STANDARD CONDITIONS OF APPROVAL:

APPLICANT is responsible and shall submit/post/obtain all necessary documentation and evidence to comply with these Standard Conditions of Approval prior to any platting, permitting, or any other form of authorization by the City including plat recording or other property conveyance to the City and prior to scheduling a pre-construction meeting. All recording shall take place at the Utah County Recorder's Office.

1. **Title Report:** Submit an updated Title Report not older than 30 days or other type of appropriate verification that shows all dedications to the City are free and clear of encumbrances, taxes, or other assessments.
2. **Property Taxes and Liens:** Submit evidence that all the property taxes, for the current and/or previous years, liens, and agricultural land use roll over fees have been paid in full.
3. **Water Rights:** Submit evidence that all the required water rights have been conveyed to American Fork City.
4. **Performance Guarantee:** Post a performance guarantee for all required public and essential common improvements.
5. **Easements and Agreements:** Submit/record a long-term Storm Water Pollution Prevention Maintenance Agreement signed and dated by the property owner and any required easement documentation.
6. **Land Disturbance Permit:** Obtain a Land Disturbance Permit.
7. **Compliance with the Plan Review Comments:** All plans and documents shall comply with all the Technical Review Committee comments and the City Engineer's final review.
8. **Commercial Structure:** Record an Owner Acknowledgment and Utility Liability Indemnification if the proposed building is a multi-unit commercial structure served by a single utility service.
9. **Sensitive Lands:** Record all applicable documents required for compliance with the City's Sensitive Lands Ordinance.
10. **Utility Notification Form:** Submit a Subdivision Utility Notification Form.
11. **Professional Verification:** Submit final stamped construction documentation by all appropriate professionals.

12. **Fees:** Payment of all development, inspection, recording, streetlight, and other project related fees.
13. **Mylar:** Submit a Mylar. All plats will receive final verification of all formats, notes, conveyances, and other items contained on the plat by City staff (recorder, legal, engineer, GIS, planning).

STAFF RECOMMENDATION:

The Accessory Structure meets the requirements of Section 17.5.105 and staff recommends APPROVING the application WITH CONDITIONS.

POTENTIAL MOTIONS – Accessory Structure Site Plan

APPROVAL

I move that we approve the Accessory Structure in excess of 1,000 square feet, located in the area of 33 East 100 North in the Residential (R4-7500) Zone, subject to any conditions found in the Staff Report.

DENIAL

I move that we deny the Accessory Structure in excess of 1,000 square feet, located in the area of 33 East 100 North in the Residential (R4-7500) Zone

TABLE

I move that we table action on the Accessory Structure in excess of 1,000 square feet, located in the area of 33 East 100 North in the Residential (R4-7500) Zone, and instruct the developer/staff to _____.

Planning Notes:
Proposed extension and area of accessory structure meet the area requirements of Sec 17.5.105

ADAM ANDERSON

Garage and Exercise Spa Addition

33 East 100 North
American Fork, UT 84002

GENERAL ARCHITECTURAL NOTES

1. CONTRACTORS SHALL REFER TO ALL APPLICABLE CONSTRUCTION PROCEDURES AS PROVIDED.
2. BEFORE PERFORMING ANY WORK, OR ORDERING ANY MATERIALS. THE CONTRACTOR SHALL BE RESPONSIBLE FOR VERIFYING ALL CONDITIONS AND DIMENSIONS OF THE WORK. THE CONTRACTOR SHALL BE RESPONSIBLE FOR ADVISING THE ARCHITECT OF ANY DISCREPANCIES AND CONFLICTS BETWEEN EXISTING CONDITIONS AND THE CONSTRUCTION DOCUMENTS PRIOR TO PROCEEDING WITH THE WORK IN QUESTION OR RELATED WORK.
3. AS A MINIMUM STANDARD ALL WORK AND MATERIALS INSTALLED SHALL BE IN STRICT ACCORDANCE WITH ALL APPLICABLE CODES, REGULATIONS AND ORDINANCES HAVING JURISDICTION.
4. INSTALL ALL PRODUCTS ACCORDING TO THE MANUFACTURER'S RECOMMENDED SPECIFICATIONS UNLESS OTHERWISE SPECIFICALLY NOTED.
5. INSTALLATION OF ALL SELECTED MATERIALS SHALL BE COMPLETE IN ALL RESPECTS PRIOR TO FINAL ACCEPTANCE ANY MISCELLANEOUS ITEMS OR MATERIALS NOT SPECIFICALLY NOTED BUT REQUIRED FOR PROPER INSTALLATIONS SHALL BE FURNISHED BY THE CONTRACTOR. THE CONTRACTOR SHALL FURNISH TO THE OWNER ALL WARRANTIES AND GUARANTEES REQUIRED AT THE CONCLUSION OF THE WORK.
6. THE CONTRACTOR SHALL NOT SCALE THE DRAWINGS. DIMENSIONS SHALL GOVERN IN ALL CASES. LARGE SCALE DRAWINGS SHALL GOVERN OVER SMALL SCALE DETAILS.
7. THE GENERAL CONTRACTOR SHALL MAINTAIN A CURRENT AND COMPLETE SET OF CONSTRUCTION DRAWINGS ON THE CONSTRUCTION FLOOR DURING ALL PHASES OF THE CONSTRUCTION FOR USE BY ALL TRADES.
8. PLAN WALL DIMENSIONS ARE FROM FACE OF STUD. " CLEAR" DIMENSIONS ARE TO FACE OF WALL FINISH. .
9. WELDING SHALL BE PERFORMED IN THE SHOP BY AN APPROVED FABRICATOR OR CERTIFIED WELDER UNDER THE SUPERVISION OF THE SPECIAL INSPECTOR.
10. THE GENERAL CONTRACTOR SHALL COORDINATE WITH THE OWNER THE LOCATION OF CONSTRUCTION TRAFFIC FOR THIS PROJECT.
11. CONSTRUCTION SHALL COMPLY WITH THE ACCESSIBILITY REQUIREMENTS PER THE BUILDING CODE AND THE AMERICANS WITH DISABILITIES ACT ACCESSIBILITY GUIDELINES.
12. SIZE, PLACEMENT , AND ORIENTATION OF FRAMING MEMBERS ON STRUCTURAL DRAWINGS OVERRIDE SIZE, PLACEMENT, AND ORIENTATION OF FRAMING MEMBERS SHOWN ON THE ARCHITECTURAL DRAWINGS. SPRINKLER, PLUMBING, MECHANICAL, OR ELECTRICAL CONTRACTORS SHALL NOT PENETRATE OR CUT STRUCTURAL MEMBERS WITHOUT PRIOR APPROVAL OF THE STRUCTURAL ENGINEER
14. PROVIDE SOLID 2X WOOD BLOCKING WITHIN STUD WALLS AT ALL ANCHORAGE LOCATIONS OF CABINETS. DOOR STOPS, TOILET ROOM ACCESSORIES AND OTHER WALL ANCHORAGE ITEMS. ANCHORAGE THROUGH GYPSUM BOARD ALONE IS NOT ACCEPTABLE.
15. CONTRACTOR IS RESPONSIBLE TO OBTAIN ANY AND ALL PERMITS ASSOCIATED WITH THE WORK AS INCLUDED IN THESE DOCUMENTS.

ABBRIVATIONS

ALL ABBRIVATIONS ARE NOT USED IN THIS PROJECT

ADMIN	- ADMINISTRATION
AFF	- ABOVE FINISHED FLOOR
ALUM	- ALUMINUM EXTRUSION
AO	- AUTOMATIC OPENING
APPROX	- APPROXIMATE
ARCH	- ARCHITECTURAL
ASF	- ALUMINUM STOREFRONT
BB	- BULLETIN BOARD
BLDG	- BUILDING
C	- STEEL CHANNEL
CA	- CONTROLLED ACCESS
CARP	- CARPET
CBT	- CERAMIC BASE TILE
CC	- CENTER TO CENTER
CFT	- CERAMIC FLOOR TILE
CLG	- CEILING
CL	- CLOSET
CLR	- CLEAR
CMU	- CONCRETE MASONRY UNIT
COL	- COLUMN
CONC	- CONCRETE
CS	- COILING STEEL
CTD	- COATED
CTG	- COATING
CU	- CUBIC
CWT	- CERAMIC WALL TILE
DEG	- DEGREES
DF	- DRINKING FOUNTAIN
DIA	- DIAMETER
DN	- DOWN
DO	- DOOR OPENING
DS	- DOUBLE SWING
DSR	- DOUBLE SWING REVERSE
DWG	- DRAWING
DWR	- DISHWASHER
DUO	- DOOR UNIT OPENING
EEW	- EMERGENCY EYE WASH
EL	- ELEVATION
ELEC	- ELECTRICAL
ELEV	- ELEVATOR
EO	- EXISTING OPENING
EQ	- EQUAL
EQUIP	- EQUIPMENT
EVAP	- EVAPORATOR
EXIST	- EXISTING
EXP	- EXPOSED STRUCTURE
EXT	- EXTERIOR
EW	- EYE WASH
FD	- FLOOR DRAIN
FF	- FACTORY FINISH
FLF	- FLUORESCENT LIGHT FIXTURE
FLR	- FLOOR
FR	- FIRE RATED
FT	- FEET
FURN	- FURNACE
GWB	- GYPSUM WALL BOARD
HB	- HOSE BIB
HCS	- HARDENED CONCRETE SURFACE
HD	- HEAVY DUTY
HDD	- HEAVY DUTY DOOR
HDW	- HEAVY DUTY WINDOW
HM	- HOLLOW METAL DOOR
HORIZ	- HORIZONTAL
HT	- NOMINAL HEIGHT
HTR	- HEATER
HVAC	- HEATING, VENTING, AIR CONDITIONING
HW	- HOLLOW WOOD DOOR
IN	- INCHES
INSUL	- INSULATION
INT	- INTERIOR
LAV	- LAVATORY
LH	- LEFT HAND
LHR	- LEFT HAND REVERSE
MB	- MARKER BOARD
MD	- METAL DECKING
MECH	- MECHANICAL
MFD	- MANUFACTURED
MFR	- MANUFACTURER
MGR	- MANAGER
MLP	- METAL SIDING LINER PANEL
MO	- MASONRY OPENING
MRT	- MOLDED RUBBER TILE
MTL	- MATERIAL
MWP	- METAL WALL PANEL
NAT	- NATURAL COLOR OF MATERIAL
NOM	- NOMINAL
OC	- ON CENTER
OHD	- OVERHEAD DOOR
OPNG	- OPENING
OPP	- OPPOSITE
OPS	- OPERATIONS
PASS	- PASSAGE
PFW	- PLASTIC FACE WOOD DOOR
PLAM	- PLASTIC LAMINATED
PLCS	- PLACES
PROT	- PROTECTIVE
PRS	- PROJECTION SCREEN
PS	- PRESSED STEEL
PSD	- PRESSED STEEL DOOR
PSW	- PRESSED STEEL WINDOW
PTD	- PAINTED
QFT	- QUARRY FLOOR TILE
RAF	- RAISED ACCESS FLOORING
RCB	- RUBBER COVE BASE
REF	- REFERENCE
REFL	- REFLECTED
REFG	- REFRIGERATOR
REQ'D	- REQUIRED
RH	- RIGHT HAND
RHR	- RIGHT HAND REVERSE
RM	- ROOM
RO	- ROUGH OPENING
RP	- RADIATION PROTECTED
RVH	- RANGE VENT HOOD
SA	- SECURITY ALARMED
SAT	- SUSPENDED ACOUSTICAL TILE
SCD	- SLIDING CLOSET DOOR
SFD	- STOREFRONT DOOR
SFW	- STOREFRONT WINDOW
SHD	- SLIDING HANGAR-TYPE DOOR
SIM	- SIMILAR
SQ	- SQUARE
STD	- STANDARD
STL	- STEEL
STN	- STAINED AND SEALED
STOR	- STORAGE
STRUCT	- STRUCTURAL
STV	- STOVE (RANGE TOP & OVEN)
SUPV	- SUPERVISOR
SWD	- SOLID WOOD DOOR
SWR	- SEWER
TELE	- TELEPHONE
THK	- NOMINAL THICKNESS
TMP	- TEMPERED GLASS
TYP	- TYPICAL
UTIL	- UTILITY
VCB	- VINYL COVE BASE
VCT	- VINYL COMPOSITION TILE
VERT	- VERTICAL
VM	- VENDING MACHINES
VWC	- VINYL WALL COVERING
WC	- WATER COOLER
WD	- WOOD
WF	- WASHFOUNTAIN
WDT	- NOMINAL WIDTH
WH	- WATER HEATER

CONTACT LIST

ARCHITECT
Rather Architecture, P.C.
Attn: John Rather
1091 W South Jordan Parkway Suite 250
South Jordan, UT 84095
Tel: 801 232-3638
email: john@ratherarchitecture.com

MECHANICAL ENGINEER (HVAC & Plumbing)
Dale R Wilde Co.
Attn: Ray Wilde, PE
428 East Winchester Street
Salt Lake City, UT 84107
Tel: 801 433-1125
Email: ray@drwco.com

STRUCTURAL ENGINEER
D. George Hansen Consulting Structural Engineers, Inc.
Attn, George Hansen, P.E
2125 Wilmott Dr.
Salt Lake City, UT 84109
Tel: 801 400-4109
Email: george@dghansen.com

ELECTRICAL ENGINEER
Dean Engineering
Attn: Dean Levorsen
459 Willow Springs Lane
Draper, UT 84020
Tel: 801 243-0854
email: deanlevorsen@msn.com

PROJECT DATA

JURISDICTION: AMERICAN FORK, UT

BUILDING CODES:
2018 INTERNATIONAL RESIDENTIAL CODE (IRC)
2018 INTERNATIONAL PLUMBING CODE (IPC)
2018 INTERNATIONAL MECHANICAL CODE (IMC)
NEC-2014 (RESIDENTIAL) EFFECTIVE JULY 1, 2018
2018 INTERNATIONAL FIRE CODE (IFC)
2018 INTERNATIONAL ENERGY CONVERSATION CODE (IECC)
2018 INTERNATIONAL SWIMMING POOL AND SPA CODE (ISPSC)

SYMBOL KEY AND LEGEND

- X/X — BUILDING SECTION
- X/X — DETAIL
- 2 — WALL TAG
- B — WINDOW NUMBER
- 2 — DOOR NUMBER
- WOOD CONTINUOUS
- WOOD BLOCKING
- RIGID INSULATION
- BATT INSULATION

BUILDING CODE ANALYSIS

DESCRIPTION:	ADDITION TO EXISTING GARAGE
AREA:	NEW GARAGE (718 SF) + NEW EXERCISE SPA AREA (567 SF) = 1,285 SF
OCCUPANCY CLASSIFICATION:	GARAGE AND EXERCISE SPA
CONSTRUCTION TYPE:	VB

DEFERRED SUBMITTALS

NOT APPLICABLE

NOTES

1. THE EXERCISE POOL SHALL BE AND "ENDLESS POOLS FITNESS SYSTEM E2000 FURNISHED AND INSTALLED AS PER THE MANUFACTURES REQUIREMENTS.

PERSCRIPTIVE TABLE: IRC TABLE N1102.1.2 (R402.1.2)
INSULATION AND FENESTRATION REQUIREMENTS (BY COMPONENT)

CLIMATE ZONE	FENESTRATION U-FACTOR	SKYLIGHT U-FACTOR	GLAZED FENESTRATION SHGC	CEILING R-VALUE	WOOD FRAME WALL R-VALUE	MASS WALL R-VALUE	FLOOR R-VALUE	BASEMENT WALL R-VALUE		CRAWL SPACE WALL R-VALUE
6	0.30	NOT USED 0.55	NR	49	20+5 or 13+10$_h$	See note 1 15/20	NOT USED 38	See note 1 15/19		NOT USED 15/19

h. The first value is cavity insulation, the second value is continuous, so "13+5" means R-13 cavity insulation plus R-5 continuous insulation.

1. The Thin-Wall provides R=16.27 inside the wall

Sheet Number	Sheet Name
T101	Cover Sheet
C1	Site and Utility
C2	Erosion and Grading
A101	Floor Plan
A102	Floor Finishes, Below Deck,
A201	Elevations
A301	Building Section
S0.1	Structural Notes
S1.0	Foundation Plan & Floor Framing Plan
S1.1	Roof Framing Plan
S2.0	Structural Details
M101	Floor Plan Mechanical
M102	Mechanical Schedule
P101	Floor Plan Waste and Vent Piping
P102	Floor Plan Water Piping
P103	Plumbing Notes and Legends
E101	Power and Lighting Plan
E201	Electrical Site Plan and Panel

American Fork City
Development Review
Committee

Planning and Zoning
Reviewed
COpperman 03/15/2023

Fire Department
Reviewed
M. Sacco 03/13/2023

Engineering Division
Reviewed
jhsu 03/15/2023

RatherArchitecture
Professional Corporation
1091 W South Jordan Parkway Suite 250
South Jordan, UT 84095
phone: 801 232-3638
email: john@ratherarchitecture.com

CONTRACTOR

PROJECT and OWNER

ADAM ANDERSON
Garage and Exercise Spa Addition
33 East 100 North
American Fork, UY 84002

STATE OF UTAH
NATHANIEL H. RATHER
9045542-0301
LICENSED ARCHITECT
DATE SIGNED
11/28/2022

REVISION

No.	Description	Date
Orig	For review	10/1/2021
Rev A	For review	10/7/2021
Rev B	Added beam at wall	10/18/2021
Rev C	Added Shower	10/18/2021
Rev D	Owner Changes	11/10/2021
Rev E	Changes	11/13/2021
Rev 0	For Permit	12/22/2021
Rev 1	Struct., Mech. and Elect. Added	2/14/2022
Rev 2	Struct., Mech. and Elect. Added	2/14/2022
Rev 3	Plan Review Changes	11/28/2022

Cover Sheet

Project number	1417.175.02
Date Started	29 Sep 2021
Drawn by	JDR
Checked by	NHR

T101

Scale As indicated

D:\Dropbox (Rather Architecture)\Rather Architecture Team Folder\Anderson Garage Addition\CAD\Anderson Garage Addition Rev 2.Dc5

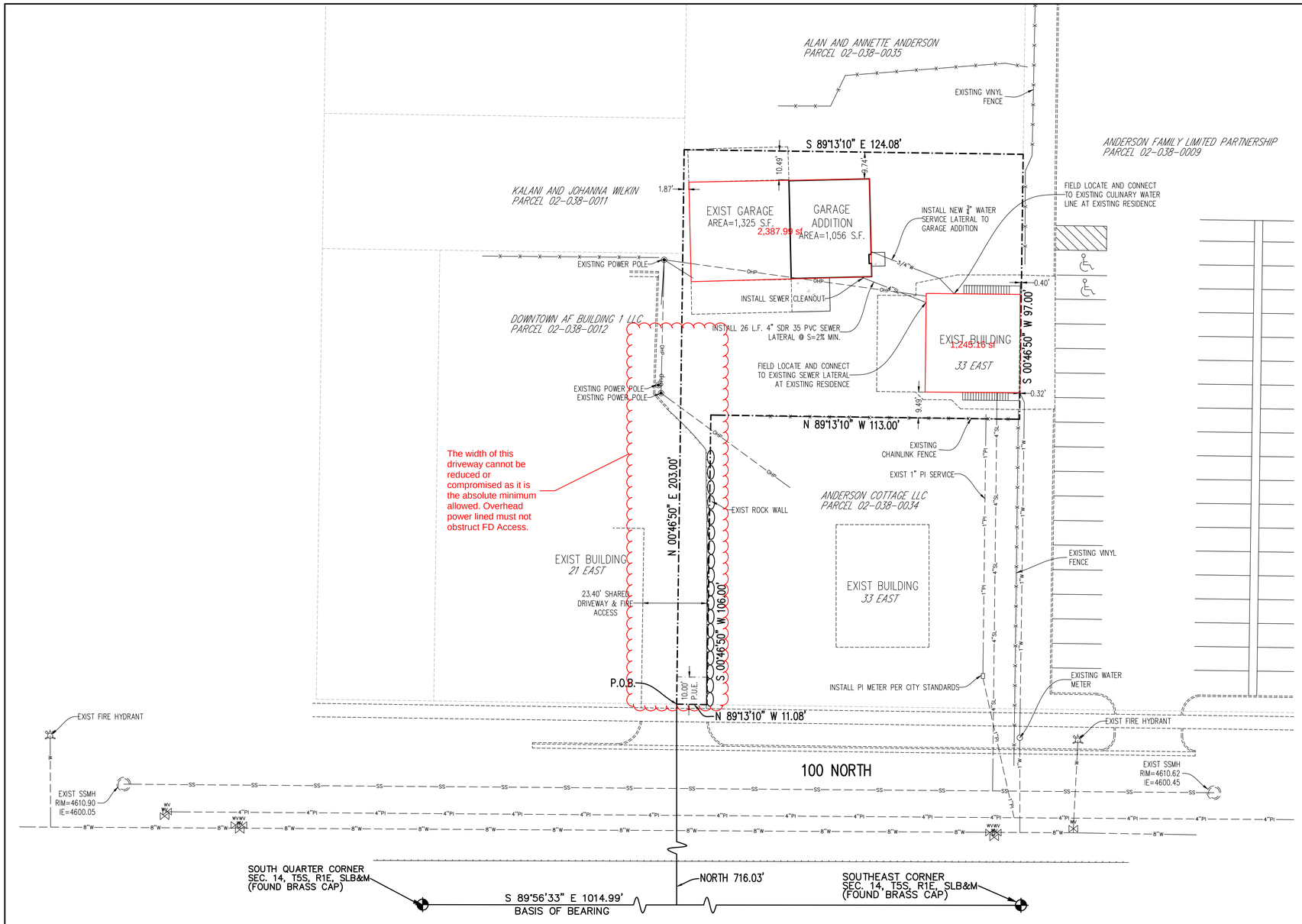

SEWER NOTES:

1. ALL SEWER MAINS AND LATERALS MUST BE INSPECTED AND APPROVED BY THE CITY OF AMERICAN FORK PUBLIC WORKS DEPARTMENT INSPECTOR BEFORE TRENCH BACKFILLING IS COMPLETED.
2. SEWER LATERALS ARE TO BE INSTALLED AT A MINIMUM SLOPE OF 2%.
3. NEW SERVICE LATERALS SHALL BE PVC PLASTIC PIPE CONFORMING TO ASTM D3034 SDR35
4. ALL LATERAL CONNECTIONS SHALL "INSERT-A-TEE" OR WYE AT TEN O'CLOCK OR TWO O'CLOCK POSITIONING TO CENTER OF MAIN LINE AND SHALL BE ENCASED IN CONCRETE AFTER INSPECTION IS MADE.
5. THERE SHALL BE A MINIMUM 3 FEET OF COVER OVER ALL SEWER LATERAL LINES AND 3.5 FEET MINIMUM COVER AT PROPERTY LINE.
6. THERE SHALL BE A MAXIMUM DISTANCE OF 5 FEET FROM THE FOUNDATION WALL TO THE FIRST EXTERIOR CLEANOUT WITH A MAXIMUM DISTANCE BETWEEN CLEANOUTS OF 75 FEET.
7. THERE SHALL A BE CLEANOUT AT ANY 90° BEND OR ANY COMBINATION OF BENDS IN EXCESS OF 90°.
8. CLEANOUT STANDPIPE CAN BE CAST IRON OR IRON OR PVC WITH CAST IRON CAP OR BRASS CAP.
9. ALL CLEANOUTS SHALL REMAIN VISIBLE AND ACCESSIBLE.
10. ALL SEWER CONSTRUCTION MUST CONFORM TO AF CITY STANDARD DRAWINGS.

WATER NOTES:

1. ALL WATER MAINS, TRANSMISSION AND DISTRIBUTION LINES, SHALL BE CONSTRUCTED USING DUCTILE IRON IN ACCORDANCE WITH AWWA C151 AND ANSI A-21.51
2. DUCTILE IRON PIPE SHALL BE CLASS 50 FOR SLIP-ON OR MECHANICAL JOINT PIPING (CLASS 51 FOR 6 INCH SIZE AND UNDER) AND CLASS 53 FOR FLANGED JOINT PIPING UNLESS OTHERWISE REQUIRED BY THE CITY ENGINEER.
3. ALL WATER CONSTRUCTION TO CONFORM TO AF CITY STANDARD DRAWINGS.
4. WATER LINE MIN. COVER IS 48" TO TOP OF PIPE.
5. WATER SERVICE MATERIAL TO BE POLY PIPE.

GENERAL UTILITY NOTES:

1. THERE ARE NO EXISTING LAND DRAINAGE SYSTEMS, WETLANDS, OR DRAINAGE AREAS TRIBUTARY TO THIS SITE.
2. NO UTILITY LINE EXTENSIONS REQUIRED FROM ADJACENT PROPERTY OWNERS.
3. ALL CONSTRUCTION SHALL CONFORM TO AMERICAN FORK CITY STANDARDS AND SPECIFICATIONS, LATEST EDITION.
4. ALL ROOF DRAINS WILL BE CONVEYED TO THE APPROPRIATE UNDERGROUND FACILITY WHERE POSSIBLE, NOT CONVEYED ACROSS PARKING OR SIDEWALK. ROOF DRAINS SHOULD DISCHARGE AT LEAST 10 FEET FROM FOUNDATIONS OR BACKFILL LIMITS, WHICHEVER IS GREATER. CONNECT ALL ROOF DRAINS TO STORM DRAIN PIPING SHOWN WHERE POSSIBLE.

FIRE HYDANT NOTE

1. CONSTRUCTION TYPE = VB
2. TOTAL SQUARE FOOTAGE = 2,381 S.F.
3. REQUIRED FIRE FLOW = 1,500 GPM
4. HYDRANTS REQUIRED FOR 1,500 GPM = 1, THERE ARE EXISTING HYDRANTS ON 100 NORTH TO SATISFY THIS REQUIREMENT.

20 10 0 20 40 60

Scale 1" = 20'

UTILITY LEGEND

- FIRE HYDRANT
- 6"PI — PRESSURE IRRIG.
- 8"W — CULINARY WATER
- 8"SS — SEWER PIPE PVC SDR-35
- 15"SD — STORM DRAIN PIPE
- EDGE OF ASPHALT
- X — X — FENCE
- OHP — OVERHEAD POWER LINE
- G — GAS LINE

NOTES TO CONTRACTOR

1. CONTRACTOR TO FIELD VERIFY ALL EXISTING CURB & GUTTER, STORM DRAIN, & SEWER ELEVATIONS OR INVERTS PRIOR TO CONSTRUCTION AND NOTIFY ENGINEER WHEN ELEVATIONS OR INVERTS DO NOT MATCH PLANS.
2. THE LOCATION OF EXISTING UNDERGROUND UTILITIES IS SHOWN IN APPROXIMATE LOCATIONS. THE CONTRACTOR SHALL DETERMINE THE EXACT LOCATION OF ALL EXISTING UTILITIES BEFORE COMMENCING WORK. HE AGREES TO BE FULLY RESPONSIBLE FOR ANY AND ALL DAMAGES WHICH MIGHT BE OCCASIONED BY HIS FAILURE TO EXACTLY LOCATE AND PRESERVE AND ALL UNDERGROUND UTILITIES, WHETHER OR NOT SUCH FACILITIES ARE SHOWN ON THESE PLANS.

BOUNDARY DESCRIPTION

BEGINNING AT A POINT LOCATED NORTH 89°13'10" WEST 522.59 FEET ALONG THE SOUTHERLY BLOCK LINE OF BLOCK 25, PLAT "A" AMERICAN FORK CITY SURVEY OF BUILDING LOTS, SAID POINT ALSO BEING LOCATED SOUTH 89°56'33" EAST ALONG THE SECTION LINE 1014.99 FEET AND NORTH 716.03 FEET FROM THE SOUTH QUARTER CORNER OF SECTION 14, TOWNSHIP 5 SOUTH, RANGE 1 EAST, SALT LAKE BASE AND MERIDIAN; THENCE NORTH 00°46'50" EAST 203.00 FEET; THENCE SOUTH 89°13'10" EAST 124.08 FEET; THENCE SOUTH 00°46'50" WEST 97.00 FEET; THENCE NORTH 89°13'10" WEST 113.00 FEET; THENCE SOUTH 00°46'50" WEST 106.00 FEET; THENCE NORTH 89°13'10" WEST 11.08 FEET TO THE POINT OF BEGINNING.

AREA = 13,194 SQ. FT. OR 0.3029 ACRES

SHEET INDEX

C1 SITE & UTILITY PLAN
C2 GRADING & EROSION CONTROL PLAN

REGISTERED PROFESSIONAL ENGINEER
1/30/23
No. 270393
DAVID W. PETERSON
STATE OF UTAH

Know what's below. Call before you dig.

SURVEYOR:
LEVEL OF FOCUS, INC
1334 East 1150 South
Spanish Fork, Utah 84660
(801) 319-5441

BENCH MARK	REVISIONS		
SOUTH QUARTER CORNER, SECTION 14, TOWNSHIP 5 SOUTH, RANGE 1 EAST, SALT LAKE BASE AND MERIDIAN ELEVATION = 4594.27 (NGVD 29 DATUM) NAVD 88 IS 3.6' HIGHER THAN NGVD 29	Rev.	Date	Description

Developer: ADAM ANDERSON
95 EAST 200 NORTH, AMERICAN FORK, UT 801-763-8813

EXCEL ENGINEERING
David W. Peterson, P.E., License #270393
12 West 100 North, Suite 201C, American Fork, UT 84003
P: (801) 756-4504; david@excelcivil.com

ANDERSON GARAGE ADDITION

AMERICAN FORK 33 EAST 100 NORTH UTAH

Drawn by: D.W.P.	SITE & UTILITY PLAN	Scale: 1"=20'
Designed by: D.W.P.		Date: 01/30/23
Checked by: D.W.P.		C1

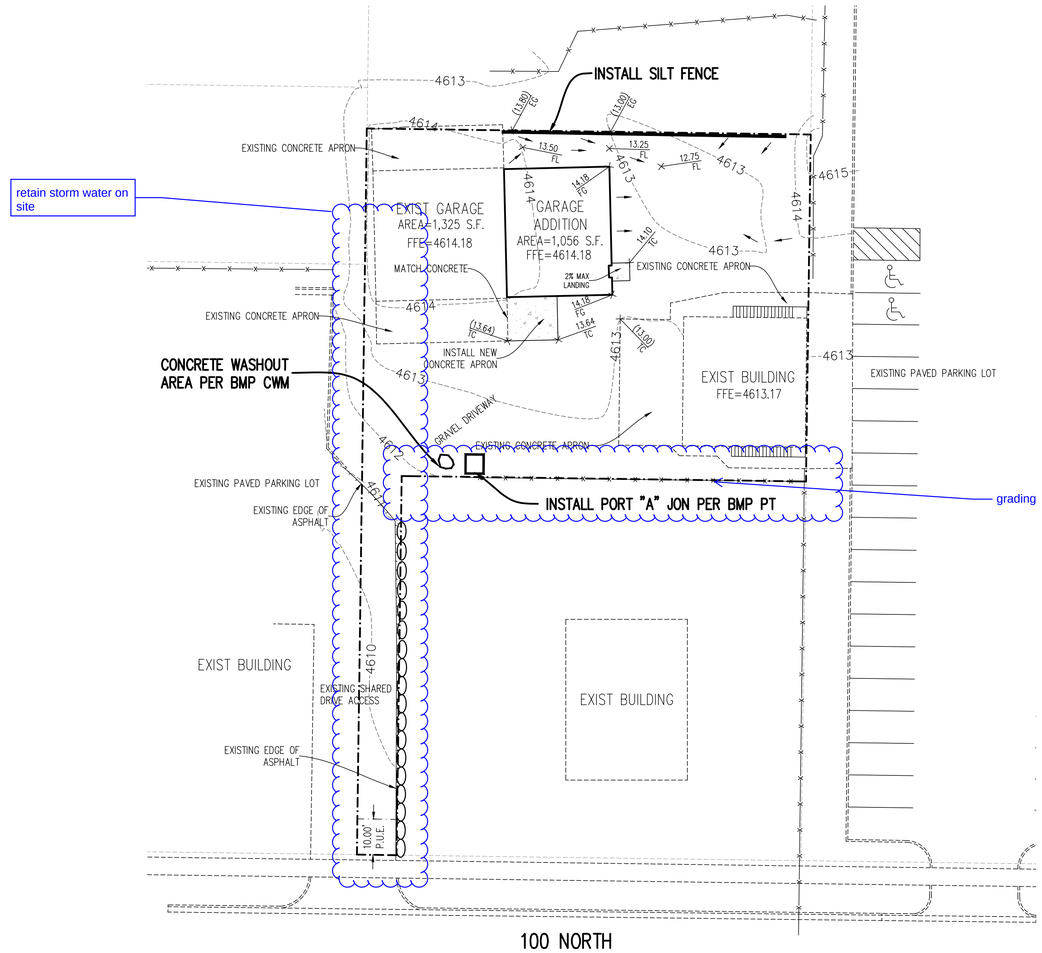

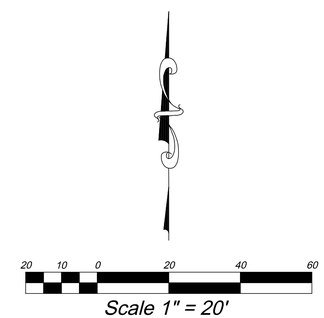

EROSION CONTROL NOTES:

1. CONSTRUCT A SILT FENCE AS SHOWN ON PLAN. SEE BMP SF.
2. INSTALL CONCRETE WASH OUT AREA. SEE BMP CWM
3. INSTALL PORTABLE TOILET. SEE BMP PT
4. CONTRACTOR WILL BE RESPONSIBLE FOR THE IMPLEMENTATION AND MAINTENANCE OF BMP'S DURING CONSTRUCTION.

SWPPP CONTACT LIST:

COMPANY	CONTACT	PHONE
AF STORM DRAIN SEWER	Ashton Hardy	(801) 404 6162
AF STORM WATER INSPECTOR	Harlan Nielson	(801) 404 6361
AF FLOOD IRRIGATION COMPANY	Ernie Johns	(801) 756 6626
TIMPANOGOS SPECIAL SERVICE DISTRICT	Jon Adams	(801) 756 5231

REGISTERED PROFESSIONAL ENGINEER
1/30/23
No. 270393
DAVID W. PETERSON
STATE OF UTAH

Know what's below. Call before you dig.

SURVEYOR:
LEVEL OF FOCUS, INC
1334 East 1150 South
Spanish Fork, Utah 84660
(801) 319-5441

BENCH MARK

SOUTH QUARTER CORNER, SECTION 14, TOWNSHIP 5 SOUTH, RANGE 1 EAST, SALT LAKE BASE AND MERIDIAN
ELEVATION = 4594.27 (NGVD 29 DATUM)
NAVD 88 IS 3.6' HIGHER THAN NGVD 29

REVISIONS

Rev.	Date	Description

Developer: ADAM ANDERSON
95 EAST 200 NORTH, AMERICAN FORK, UT 801-763-8813

EXCEL ENGINEERING
David W. Peterson, P.E., License #270393
12 West 100 North, Suite 201C, American Fork, UT 84003
P: (801) 756-4504; david@exceleivil.com

ANDERSON GARAGE ADDITION

AMERICAN FORK 33 EAST 100 NORTH UTAH

Drawn by: D.W.P.
Designed by: D.W.P.
Checked by: D.W.P.

GRADING & EROSION CONTROL PLAN

Scale: 1"=20'
Date: 01/30/23
C2

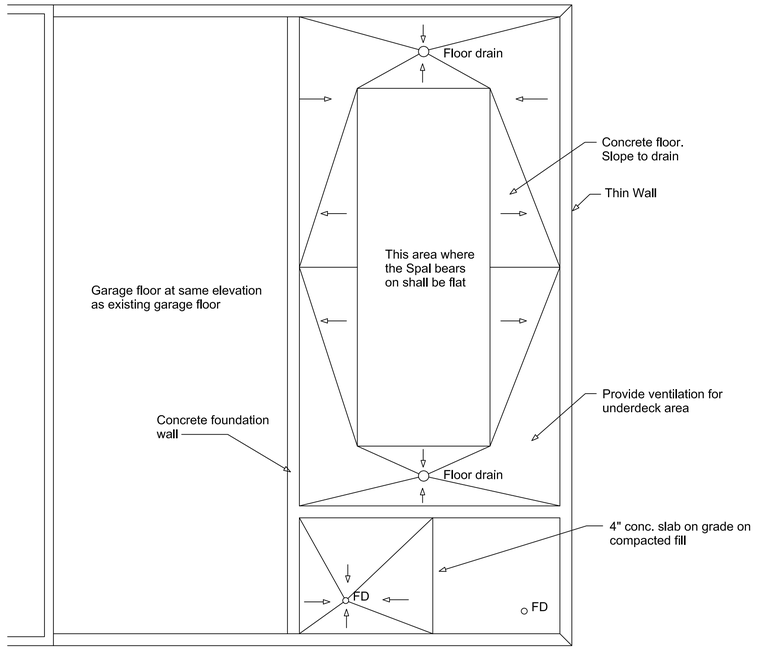

Below Deck Plan

Scale: 1/4" = 1'-0"

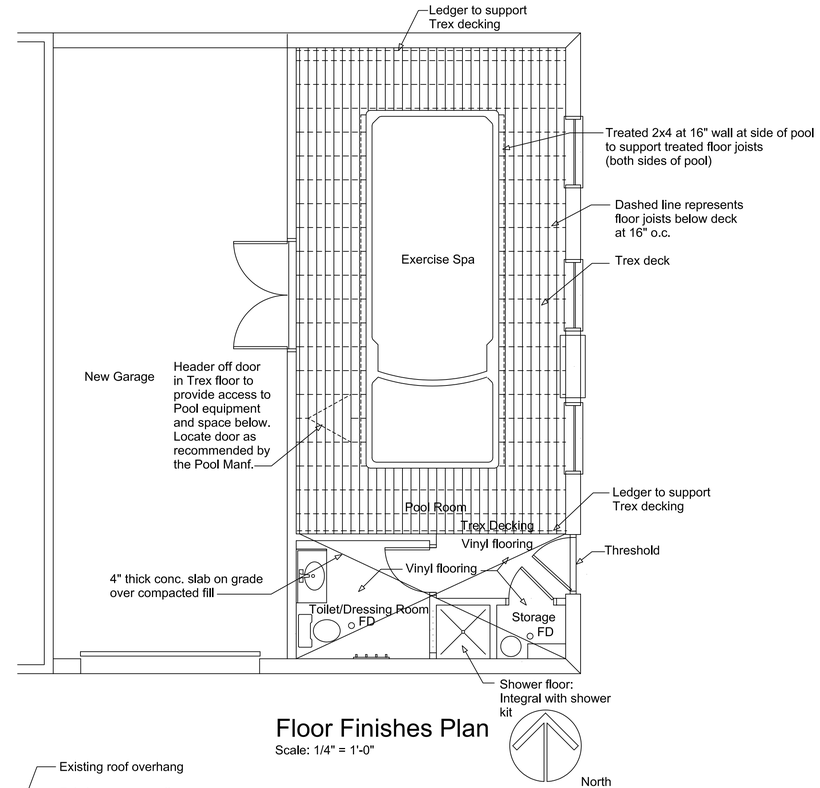

Floor Finishes Plan

Scale: 1/4" = 1'-0"

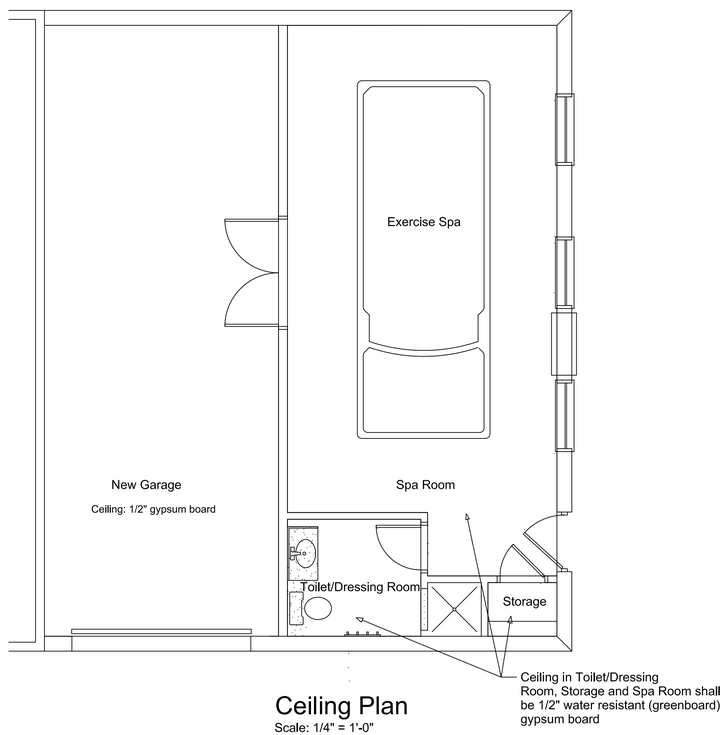

Ceiling Plan

Scale: 1/4" = 1'-0"

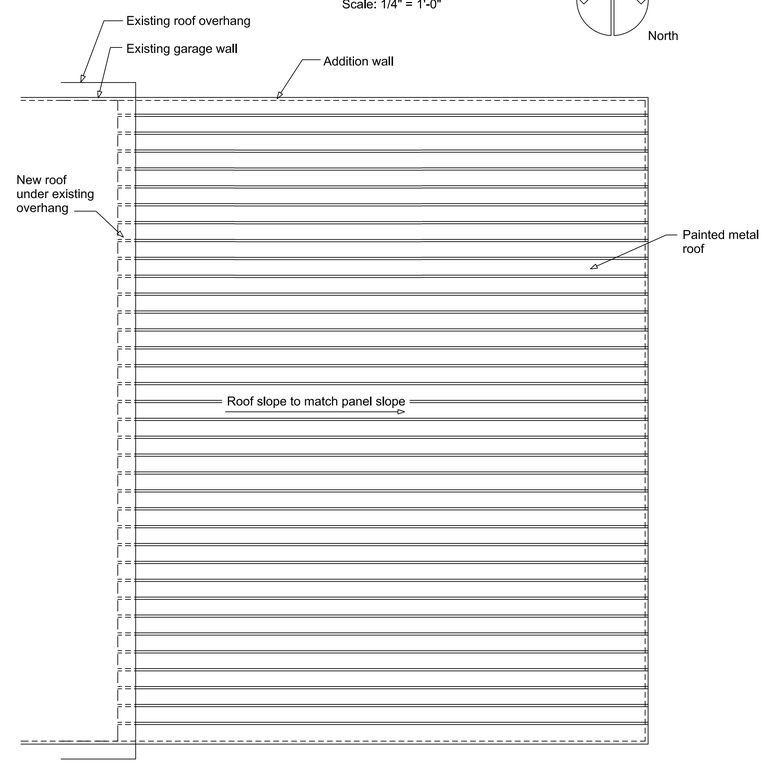

Roof Plan

Scale: 1/4" = 1'-0"

RatherArchitecture
Professional Corporation

1091 W South Jordan Parkway Suite 250
South Jordan, UT 84095
phone: 801 232-3638
email: john@ratherarchitecture.com

CONTRACTOR

PROJECT and OWNER

ADAM ANDERSON
Garage and Exercise Spa Addition

33 East 100 North
American Fork, UT 84002

STATE OF UTAH
NATHANIEL H. RATHER
9045542-0301
LICENSED ARCHITECT

DATE SIGNED
11/28/2022

REVISION

No.	Description	Date
Orig	For review	10/1/2021
Rev A	For review	10/7/2021
Rev B	Added beam at wall	10/18/2021
Rev C	Added Shower	10/18/2021
Rev D	Owner Changes	11/10/2021
Rev E	Changes	11/13/2021
Rev D	For Permit	12/22/2021
Rev 3	Plan Review Changes	11/28/2022

Floor Finishes, Below Deck, Ceiling Plan and Roof Plan

Project number	1417.175.02
Date Started	29 Sep 2021
Drawn by	JDR
Checked by	NHR

A102

Scale As indicated

@DWGFULLNAMEEXT

RatherArchitecture
Professional Corporation

1091 W South Jordan Parkway Suite 250
South Jordan, UT 84095
phone: 801 232-3638
email: john@ratherarchitecture.com

CONTRACTOR

PROJECT and OWNER

ADAM ANDERSON
Garage and Exercise Spa Addition

33 East 100 North
American Fork, UY 84002

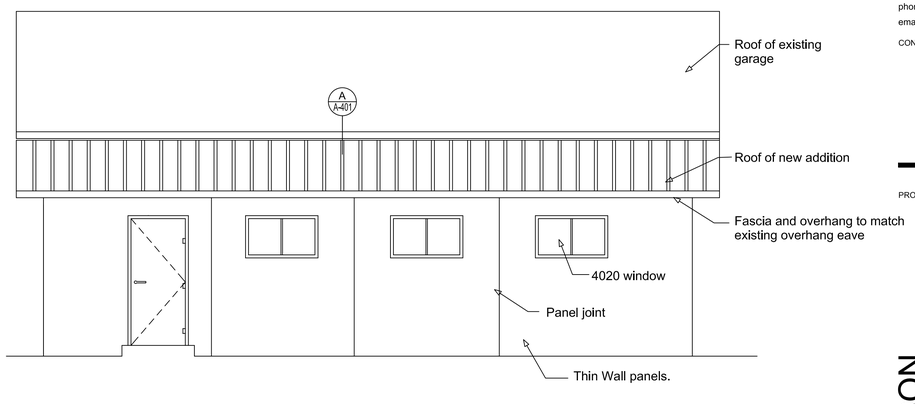

East Elevation
Scale: 1/4" = 1'-0"

Note:
The location of the Thin Wall joints are approxamate. The manufacturer of the Thin Wall panel in coordination with the Contractor shall determine the exact location of the panel joints.

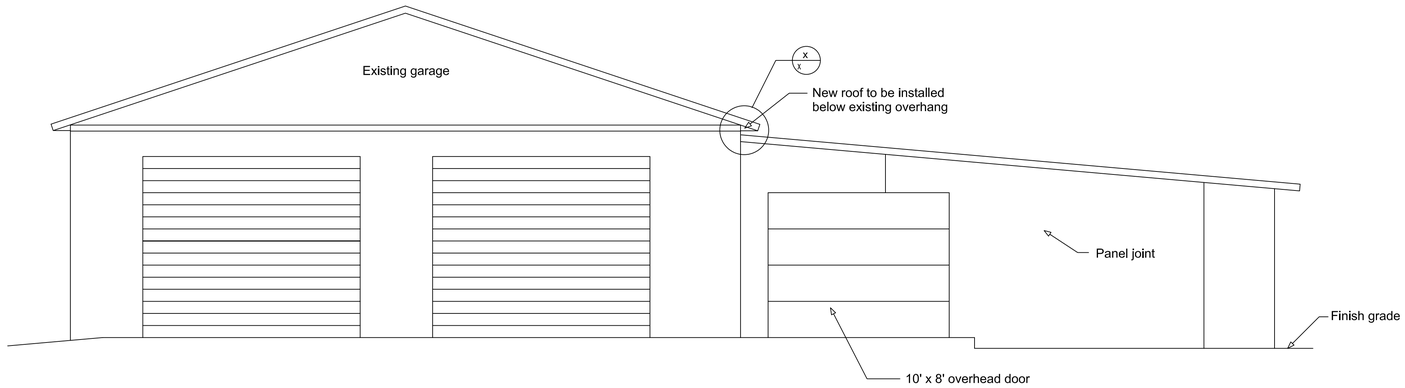

South Elevation
Scale: 1/4" = 1'-0"

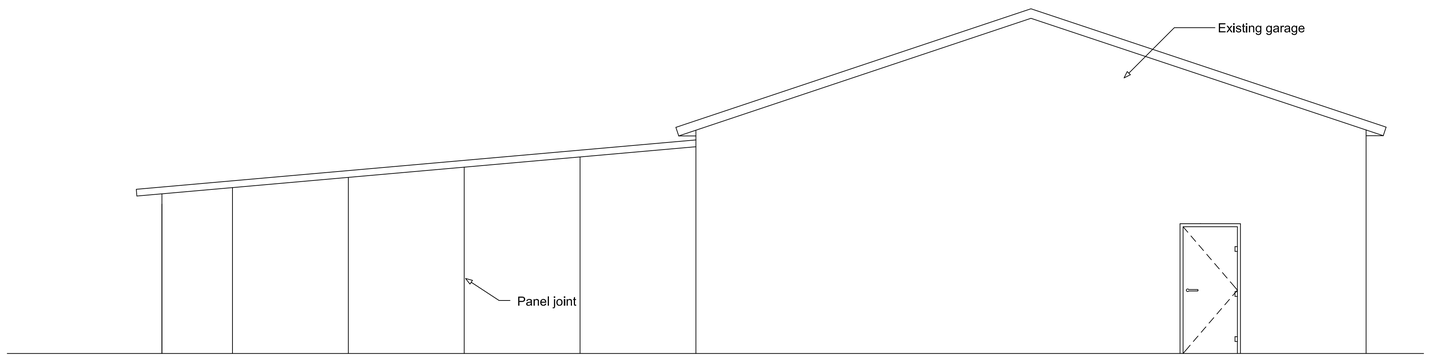

North Elevation
Scale: 1/4" = 1'-0"

DATE SIGNED
11/28/2022

REVISION

No.	Description	Date
Orig	For review	10/1/2021
Rev A	For review	10/7/2021
Rev B	Added beam at wall	10/18/2021
Rev C	Added Shower	10/18/2021
Rev D	Owner Changes	11/10/2021
Rev E	Changes	11/13/2021
Rev 0	For Permit	12/22/2021
Rev 3	Plan Review Changes	11/28/2022

Elevations

Project number	1417.175.02
Date Started	29 Sep 2021
Drawn by	JDR
Checked by	NHR

A201

Scale As Indicated

@DWGFULLNAMEEXT

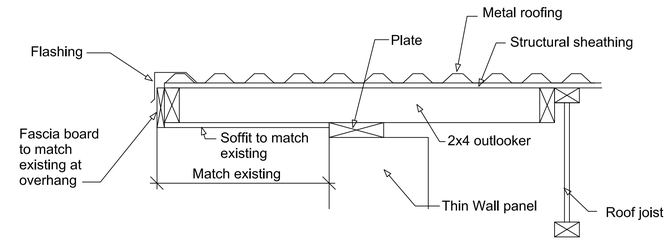

Detail at Sloped Edge

Scale: 1 1/2" = 1'-0"

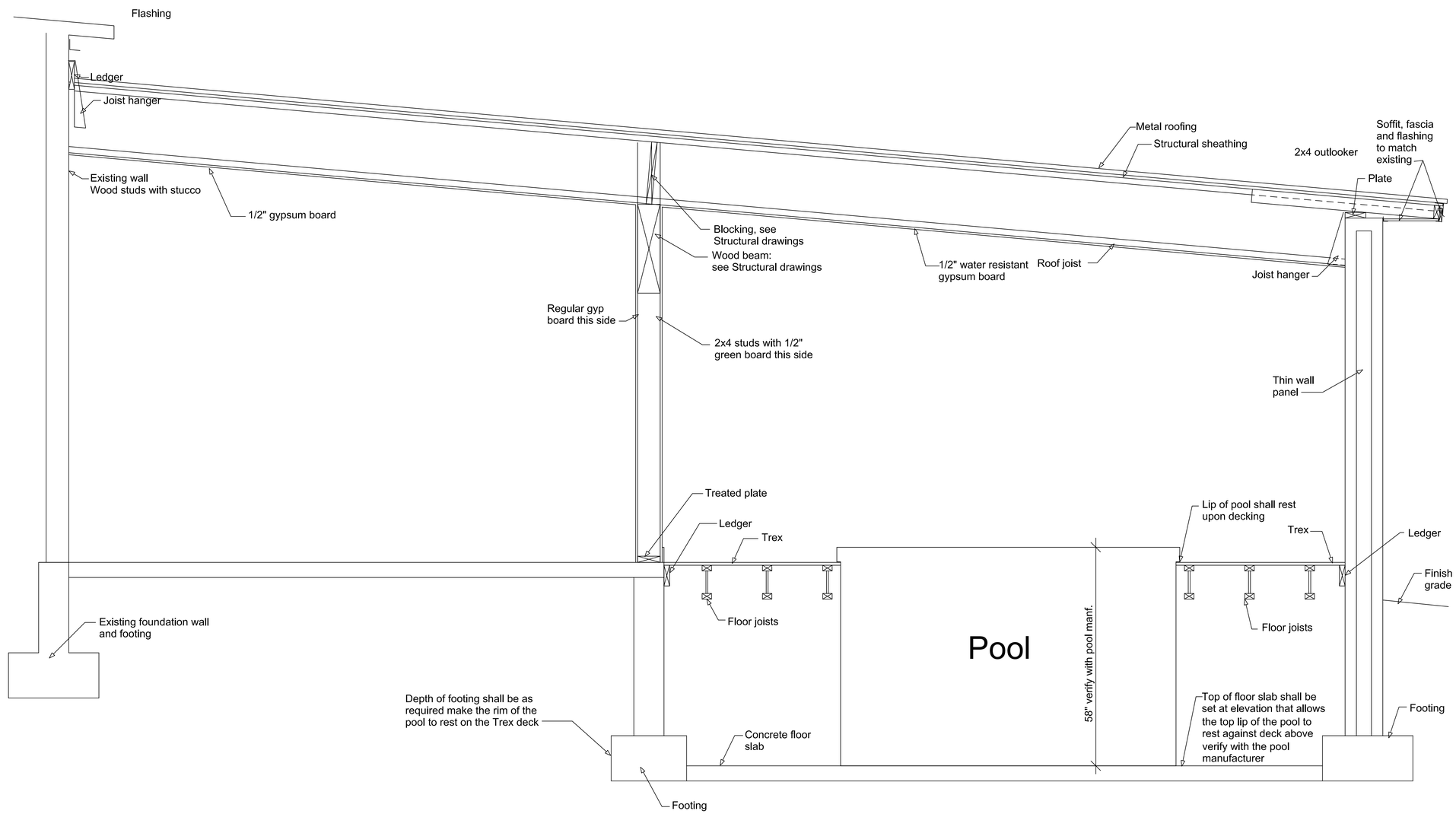

Building Section

Scale: 3/4" = 1'-0"

RatherArchitecture
Professional Corporation

1091 W South Jordan Parkway Suite 250
South Jordan, UT 84095
phone: 801 232-3638
email: john@ratherarchitecture.com

CONTRACTOR

PROJECT and OWNER

ADAM ANDERSON
Garage and Exercise Spa Addition

33 East 100 North
American Fork, UY 84002

STATE OF UTAH
NATHANIEL H. RATHER
9045542-0301
LICENSED ARCHITECT

DATE SIGNED
11/28/2022

REVISION

No.	Description	Date
Orig	For review	10/1/2021
Rev A	For review	10/7/2021
Rev B	Added beam at wall	10/18/2021
Rev C	Added Shower	10/18/2021
Rev D	Owner Changes	11/10/2021
Rev E	Changes	11/13/2021
Rev 0	For Permit	12/22/2021
Rev 3	Plan Review Changes	11/28/2022

Building Section

Project number	1417.175.02
Date Started	29 Sep 2021
Drawn by	JDR
Checked by	NHR

A301

Scale As indicated

MECHANICAL GENERAL NOTES

CODES RULES AND REGULATIONS:

ALL WORK SHALL CONFORM TO ALL APPLICABLE LOCAL AND STATE CODES.

WHENEVER INDICATED MATERIAL WORKMANSHIP, ARRANGEMENT OR CONSTRUCTION IS OF HIGHER QUALITY OR CAPACITY THAN THAT REQUIRED BY THE ABOVE CODES, THE DRAWING AND OR SPECIFICATION SHALL GOVERN.

SHOULD THERE BE ANY DIRECT CONFLICT BETWEEN THE STATE OR LOCAL CODES, LAWS OR REGULATION AND THE DRAWING AND OR SPECIFICATIONS THE CODES, LAWS OR REGULATIONS SHALL GOVERN.

STANDARDS:

INTERNATIONAL BUILDING CODE 2018 EDITION
INTERNATIONAL PLUMBING CODE 2018 EDITION
INTERNATIONAL MECHANICAL CODE 2018 EDITION
INTERNATIONAL FUEL GAS CODE 2018 EDITION
SMACNA DUCT CONSTRUCTION STANDARD, METAL AND FIBERGLASS
SMACNA FIRE DAMPER GUIDE FOR AIR HANDLING SYSTEMS
SMACNA MANUAL FOR BALANCING AND ADJUSTING OF AIR DISTRIBUTION SYSTEMS.
SMACNA GUIDELINES FOR SEISMIC RESTRAINTS OF MECHANICAL EQUIPMENT
NFPA 101 LIFE SAFETY CODES.
NFPA 90A INSTALLATION OF AIR CONDITIONING AND VENTILATION SYSTEMS.
NFPA 90B INSTALLATION OF WARM AIR HEATING SYSTEMS.
NFPA 91 INSTALLATION OF BLOWER AND EXHAUST SYSTEMS
THE STATE OF UTAH " BOILER AND PRESSURE VESSEL REGULATIONS"

EXAMINATION OF SITE:

THE CONTRACTOR SHALL CAREFULLY EXAMINE THE DRAWINGS AND THE SITE AND FAMILIARIZE THEMSELVES WITH ALL EXISTING CONDITIONS BEFORE SUBMITTING ANY PROPOSAL. NO ADDITION COST WILL BE ALLOWED FOR FAILURE TO VISIT THE SITE.

WORKING DRAWINGS AND MEASUREMENTS:

THESE DRAWINGS ARE GENERALLY DIAGRAMMATIC. THEY DO NOT SHOW EVER OFFSET AND BEND THAT MAY BE NEEDED TO INSTALL THE WORK. THE CONTRACTOR SHALL COORDINATE THE DRAWINGS OF ALL OTHER TRADES INCLUDING BUT NOT LIMITED TO THE CIVIL, ARCHITECTURAL, ELECTRICAL, AND STRUCTURAL. THESE DRAWINGS SHALL NOT BE SCALED FOR ROUGH IN OR AS SHOP DRAWINGS.

MECHANICAL GENERAL NOTES

EQUIPMENT SUBMITTALS:

PROVIDE ALL AT ONE TIME IN A THREE RING BINDER SIX COPIES OF EQUIPMENT PROPOSED TO BE USED ON THIS PROJECT.

REGARDLESS OF ANY INFORMATION OUTLINED IN THE SUBMITTALS OR SHOP DRAWINGS, THE REQUIREMENTS OF THE DRAWINGS MUST FOLLOWED AND AR NOT WAIVED OR SUPERSEDED IN ANY WAY BY THE SUBMITTALS OR SHOP DRAWING REVIEW.

CAULKING AND SEALING:

ALL SPACES BETWEEN DUCTS AND SLEEVES THROUGH FIRE WALLS, FIRE PARTITIONS, FLOORS, AND CEILINGS SHALL CAULKED WITH ONE INCH FILL OF 3M "FIRE BARRIER". CAULKING MUST BE ON BOTH SIDES OF FIRE RATED WALLS.

SUPERVISION AND WORKMANSHIP:

PROVIDE THE SERVICES OF AN EXPERIENCED FORMAN WHO SHALL BE IN CHARGE OF ALL INSTALLATION.

ALL WORKMANSHIP SHALL BE OF FIRST QUALITY. NONE BUT COMPETENT MECHANICS SHALL BE EMPLOYED IN THE WORK. SHODDY WORKMANSHIP WILL BE CAUSE FOR REJECTION AND REPLACEMENT OF WORK WITHOUT ADDITIONAL COST.

COOPERATION WITH OTHER TRADES:

REFER TO ALL THE DRAWINGS COVERING WORK OF ALL TRADES, WHICH IS CARRIED ON IN CONJUNCTION WITH THE WORK SUCH THAT ALL WORK CAN PROCEED WITHOUT INTERFERENCE RESULTING FROM LACK OF COORDINATION.

MANUFACTURERS INSTRUCTIONS:

THE CONTRACTOR SHALL FOLLOW THE MANUFACTURERS INSTALLATION INSTRUCTION EXPLICITLY IN THE INSTALLATION OF ALL ITEMS OF EQUIPMENT.

COMPLETION REQUIREMENTS:

ALL SYSTEMS SHALL BE TESTED BY THE CONTRACTOR TO DEMONSTRATE THE ALL EQUIPMENT FURNISHED AND INSTALLED OR CONNECTED FUNCTION IN THE MANNER REQUIRED.

ADJUSTMENTS, OPERATION, ETC. ADJUST ALL REGULATORS. OPEN AND CLOSE ALL VALVES SEVERAL TIMES TO INSURE SEAL.

MECHANICAL GENERAL NOTES

CLEANING:

REMOVE DEBRIS AND TRASH FROM DUCTWORK AND VACUUM IF REQUIRED. PAINT INSIDE OF ALL DUCTS VISIBLE THROUGH GRILLES AND REGISTERS WITH FLAT BLACK ENAMEL. REMOVE SHIPPING LABELS AND OTHER TAGS AND WIPE ALL EQUIPMENT CLEAN.

TESTING AND BALANCING:

AT THE COMPLETION OF THE JOB THE CONTRACTOR SHALL RETAIN THE SERVICES OF AN INDEPENDENT TESTING AND BALANCING CONTRACTOR. PROVIDE ALL TOOLS , EQUIPMENT AND INSTRUMENTS REQUIRED FOR THE TEST AND BALANCING PROCEDURES. TEST AND BALANCE BOTH THE AIR SYSTEMS AND THE HYDRAULIC SYSTEMS.

SUBMIT 4 COPIES OF COMPLETE TEST AND BALANCING REPORTS COMPLETE WITH HALF SCALE DRAWINGS INDICATING THE AIR OPENING NUMBERS AND FLOW STATION NUMBERS THAT CORRESPOND TO THE NUMBERING SYSTEMS IN THE REPORTS

IDENTIFY AND LIST SIZE TYPE AND MANUFACTURER OF ALL EQUIPMENT. MAKE ALL ADJUSTMENTS TO DAMPERS, DRIVES AND BALANCE VALVES TO OBTAIN THE DESIGN FLOW QUANTITIES . FLOW QUANTITIES SHALL BE WITHIN PLUS OR MINUS 5 % OF DESIGN.

GUARANTEE:

BY THE ACCEPTANCE OF AN CONTRACT AWARD FOR THE WORK HERE IN DESCRIBED OR SHOWN ON THE DRAWINGS, THE CONTRACTOR ASSUMES THE FULL RESPONSIBILITY IMPOSED BY THE GUARANTEE AS SET FORTH HEREIN, AND SHALL PROTECT HIMSELF THROUGH PROPER GUARANTEES FROM EQUIPMENT VENDORS AND FROM SUBCONTRACTORS AS THEIR INTERESTS MAY APPEAR.

1. THAT THE ENTIRE MECHANICAL SYSTEMS SHALL BE QUIET IN OPERATION.
2. THAT THE CIRCULATION OF WATER SHALL BE COMPLETE AND EVEN INCLUDING THE DOMESTIC HOT WATER SYSTEM.
3. THAT HE WILL MAKE PROMPTLY UPON NOTICE, FREE OF CHARGE, ANY REPAIRS NECESSARY DUE TO DEFECTIVE MATERIALS OR MATERIALS OR WORKMANSHIP THAT MAY OCCUR DURING A PERIOD OF ONE YEAR FROM THE DATE OF SUBSTANTIAL COMPLETION. FIVE YEARS FOR AIR CONDITIONING COMPRESSORS.

MECHANICAL INSULATION SCHEDULE

NOTES:

ALL INSULATION SHALL HAVE SURFACE BURNING CHARACTERISTICS, AS TESTED BY ASTM E84, UL723 OR NFPA 255 NOT EXCEEDING : FLAME SPREAD 25 AND SMOKE DEVELOPED 50.

COMPOSITE SHALL INCLUDE INSULATION JACKETING AND ADHESIVES USE TO SECURE JACKETING OR FACING. ALL ACCESSORY ITEMS SUCH AS PVC JACKETING AND FITTINGS, ADHESIVES, MASTIC, CEMENT, TAPE AND CLOTH SHALL HAVE SAME COMPONENT RATING AS ABOVE.

THERMAL DUCT WRAP:

FIBERGLASS BLANKET INSULATION: THERMAL CONDUCTIVITY OF 0.28 BTU-INPER SQ FT PER HOUR AT 75 DEG F MEAN TEMPERATURE. MINIMUM DENSITY OF ONE POUND PER CUBIC FOOT. JACKETED WITH ALUMINUM FOIL REINFORCED WITH FIBERGLASS SCRIM LAMINATED KRAFT FACING.

THERMAL DUCT WRAP INSTALLATION:

WRAP ALL SUPPLY, RETURN, AND OUTSIDE AIR WITH 1-1/2" DUCT WRAP IN ACCORDANCE WITH MANUFACTURERS INSTALLATION INSTRUCTIONS. DUCT THAT ARE INTERNALLY LINED NEED NOT BE WRAPPED.

DUCTWORK IN UNCONDITIONED SPACES

ALL DUCTWORK RUNNING THROUGH UNCONDITIONED SPACES MUST HAVE A MINIMUM R-12 INSULATION.

SYMBOL LEGEND

SYMBOL	DESCRIPTION
	SUPPLY AIR (S.A.)
	RETURN AIR (R.A.)
	TURNING VANES
MD	MANUAL DAMPER
FD	FIRE DAMPER
SD	SMOKE DAMPER
	EXISTING DUCTWORK

GENERAL NOTES

COORDINATE ALL SUSPENDED EQUIPMENT WITH ARCHITECTURAL REFLECTED CEILING PLAN.

IT IS THE RESPONSIBILITY OF THE MECHANICAL CONTRACTOR TO COORDINATE HIS WORK WITH ALL OTHER TRADES.

COORDINATE ALL ROOF MOUNTED MECHANICAL EQUIPMENT WITH STRUCTURAL PLANS. THE MECHANICAL CONTRACTOR SHALL BE RESPONSIBLE FOR ADDITIONAL STRUCTURE REQUIRED TO SUPPORT THE EQUIPMENT IF EQUIPMENT WEIGHT AND DIMENSIONS EXCEED WHAT HAS BEEN SCHEDULED AND SHOWN ON THE DRAWINGS.

COORDINATE ALL ROOF PENETRATIONS WITH STRUCTURAL DRAWINGS.

ALL DUCT SIZES ARE CLEAR INSIDE DIMENSIONS. INCREASE SIZES AS REQUIRED FOR DUCT LINER.

ALL EQUIPMENT DESIGNED TO BE FIXED IN POSITION SHALL BE SECURELY FASTENED IN PLACE.

ALL QUESTION MUST BE SUBMITTED TO THE ARCHITECT IN THE FORM OF AN RFI. ANY RFI SENT DIRECTLY TO ENGINEER WILL BE RETURNED UNREAD.

ANY RFI's THAT HAVE BEEN CORRECTED OR APPROVED BY THE ENGINEER WILL BE JUST FOR CLARIFICATION, AND DOES NOT CONSTITUTE A CHANGE ORDER.

CHANGE ORDERS MUST BE SUBMITTED TO THE ARCHITECT, THE CHANGE ORDER SHALL BE COMPLETE BY LISTING THE FINAL PRICING WITH PROPER BREAKDOWN AND DOCUMENTATION. POSSIBLE TIME EXTENSION OR DELAY AND THE ASSOCIATED COST FOR THE TIME EXTENSION OR DELAY. MATERIAL AND LABOR COST.

RFI's WITH BE RETURNED TO ARCHITECT FROM ENGINEER WITHIN 5 WORKING DAYS.

CHANGE ORDERS WILL BE RETURNED TO ARCHITECT FROM ENGINEER WITHIN 15 DAYS.

DO NOT PROCEED WITH RFI UNTIL CHANGE ORDER HAS BEEN APPROVED BY ARCHITECT, OWNER AND ENGINEER. IF CONTRACTOR DOES SO IT WILL BE AT THERE OWN RISK.

IF TIME EXTENSIONS AND/OR DELAYS ARE INCURRED DUE TO FAILURE TO ISSUE AN RFI, CHANGE REQUEST, CHANGE ORDER, OR IMPROPER AND/OR INCOMPLETE DOCUMENTATION THE COST ASSOCIATED WITH THE DELAY WILL BE BORNE BY THE CONTRACTOR.

MECHANICAL CALLOUT

EF-6 / 600	SYMBOL / CAPACITY	EQUIPMENT
CU	CONDENSING NIT	
DH	DEHUMIDIFIER	
EWH	ELECTRIC WALL HEATER	
EF	EXHAUST FAN	
UH	UNIT HEATER	
9x9-4 CD / 175	SIZE / TYPE / PATTERN / CFM	DIFFUSER OR GRILLE
CDR	ROUND CONE DIFFUSER	
SWR	SIDEWALL RETURN AIR GRILLE	

SEISMIC BRACING SUBMITTAL REQUIREMENTS

THE CONTRACTOR SHALL BE RESPONSIBLE FOR THE DESIGN AND INSTALLATION OF ALL REQUIRED SEISMIC BRACING BY THE 2018 INTERNATIONAL BUILDING CODE, SECTION 1613 EARTHQUAKE LOADS, PARAGRAPH 1613.1 SCOPE. RESTRAINT MUST BE PROVIDED FOR THE FOLLOWING CONDITIONS, UNLESS OTHERWISE EXCLUDED BY CHAPTER 13 OF ASCE 7-10: (1) Ip>1.0, (2) MEP COMPONENTS > 400 POUNDS AND SUPPORTED BY A FLOOR OR ROOF: (3) MEP COMPONENTS > 20 POUNDS AND SUPPORTED BY A CEILING OR WALL: OR (4) MEP DISTRIBUTION SYSTEM WEIGHING > 5 PLF.

THE CONTRACTOR SHALL PROVIDE A COMPLETE SUBMITTAL FOR ALL MEP EQUIPMENT TO INCLUDE LOCATION OF EACH SEISMIC BRACE, TYPE AND DESIGN OF THE BRACING, AND A DETAIL OF THE SEISMIC BRACING. THE SUBMITTAL SHALL BE ON 36"x24" SHEETS AND A SCALE OF 1/4" = 1'-0", ALONG WITH A COMPLETE SET OF CALCULATIONS.

THE SUBMITTAL SHALL CLEARLY INDICATE WHICH ITEMS ARE REQUIRED TO BE BRACED AND THE MINIMUM BRACING REQUIREMENTS (E.G. PER IBC 103.1 AND CHAPTER 13 OF ASCE 7-10). IN ADDITION THE SUBMITTAL SHALL BE PROVIDED BY A LICENCED PROFESSIONAL ENGINEER LICENCED IN UTAH.

UNDER NO CONDITIONS SHALL ANY MECHANICAL OR ELECTRICAL COMPONENTS BE INSTALLED UNTIL SUCH TIME AS THE AMERICAN FORK CITY BUILDING DEPARTMENT HAS REVIEWED AND APPROVED THE SUBMITTAL.

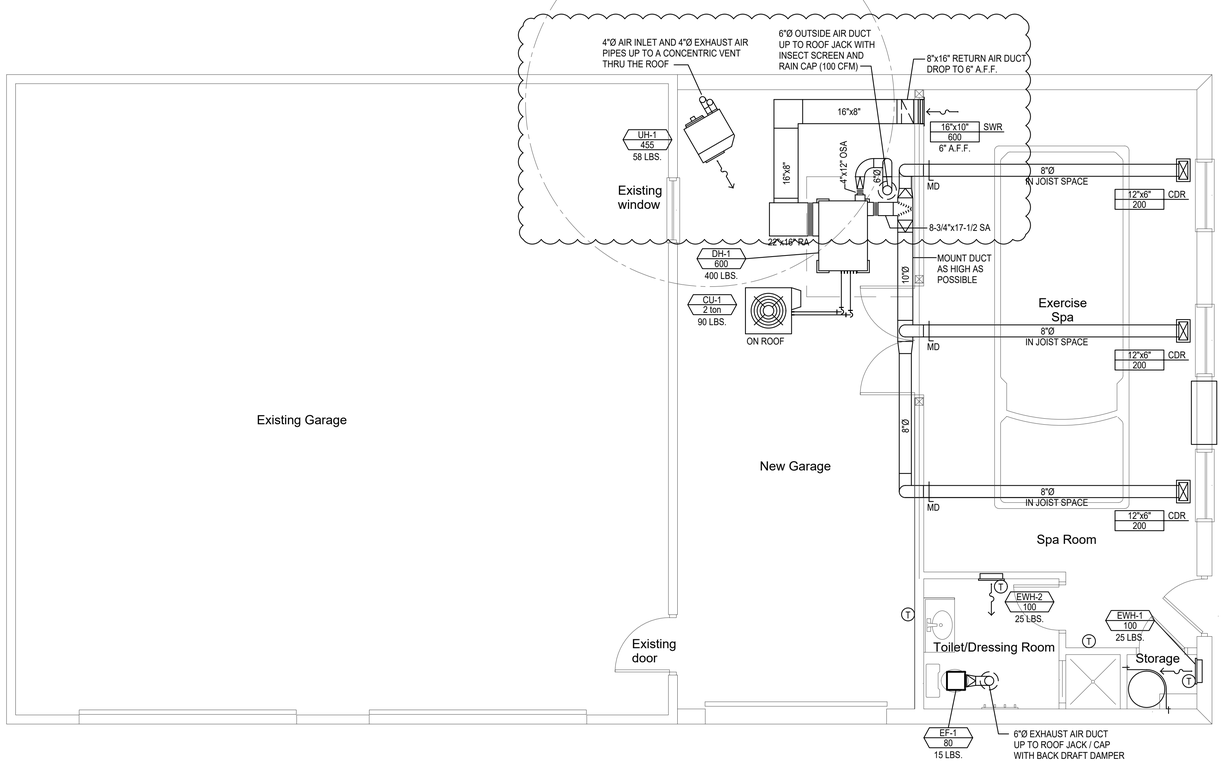

Floor Plan

Scale: 1/4" = 1'-0"

North

RatherArchitecture
Professional Corporation
1091 W South Jordan Parkway Suite 250
South Jordan, UT 84095
phone: 801 232-3638
email: john@ratherarchitecture.com

CONTRACTOR

PROJECT and OWNER

ADAM ANDERSON
Garage and Exercise Spa Addition

33 East 100 North
American Fork, UY 84002

REGISTERED PROFESSIONAL ENGINEER 155864-2202 DALE R. WILDE JR. 02-14-2023 STATE OF UTAH

REVISION

No.	Description	Date
Orig	For review	10/1/2021
Rev A	For review	10/7/2021
Rev B	Added beam at wall	10/18/2021
Rev C	Added Shower	10/18/2021
Rev D	Owner Changes	11/10/2021
Rev E	Changes	11/13/2021
Rev 0	For Permit	12/22/2021
Rev 1	City Review	02/14/2023

DALE R. WILDE CO.
CONSULTING ENGINEERS
428 WINCHESTER SUITE 240
SALT LAKE CITY, UTAH 84107
PHONE 801-433-1125 – EMAIL WILDE@DRWCO.COM

COPYRIGHT
DATE Feb. 15, 2022
THESE DOCUMENTS ARE INSTRUMENTS OF PROFESSIONAL SERVICE AND THE INFORMATION CONTAINED HEREIN IS INCOMPLETE UNLESS IN CONJUNCTION WITH DALE R. WILDE CO. ENGINEER'S INTERPRETATIONS, DECISIONS, OBSERVATIONS AND ADMINISTRATIONS. USE OR REPRODUCTION OF THESE DOCUMENTS IN WHOLE OR IN PART WITHOUT DALE R. WILDE CO. ENGINEER'S CONSENT IS IN VIOLATION OF COMMON LAW. COPYRIGHTS, STATUTORY AND OTHER RESERVED RIGHTS. REFER TO ACT 17 U.S.C. PAR. 511 (1991). WHICH PREEMPTS STATE AND LOCAL PUBLIC RECORD ACTS. REFER TO ACT 17 U.S.C. PAR. 301 (1991).

Floor Plan Mechanical

Project number	1417.175.02
Date Started	Feb. 15, 2022
Drawn by	DBH
Checked by	DRW

M101

Scale As indicated

@DWGFULLNAMEEXT

UNIT HEATER SCHEDULE

UNIT DATA		
SYMBOL		UH-1
MANUFACTURER		REZNOR
MODEL NUMBER		UDZ 30
PERFORMANCE		
INPUT HEATING CAPACITY	BTUH	30,000
	kw/h	8.8
THERMAL EFFICIENCY	%	82%
OUTPUT HEATING CAPACITY	BTUH	24,600
	kw/h	7.2
GAS CONNECTION	NATURAL	1/2"
VENT CONNECTION	DIA.	4"
COMBUSTION AIR INLET	DIA.	4"
CONTROL AMPS	24 VOLT	1.0
FULL LOAD AMPS	115 VOLT	1.9
MAX. OVER CURRENT PROTECTION	115 VOLT	15
NORMAL POWER CONSUMPTION	WATTS	109
DISCHARGE AIR TEMPERATURE RISE	Deg. F.	50
AIR VOLUME	CFM	456
DISCHARGE AIR OPENING AREA	ft2	0.96
OUTPUT VELOCITY	FPM	475
FAN MOTOR	OPEN	0.02
	ENCLOSED	0.06
FAN MOTOR	RPM	1550
FAN DIAMETER	INCHES	10
SOUND LEVEL	dba @ 15 ft.	40
DIMENSIONS		
HEIGHT	INCHES	13.3/4"
LENGTH	INCHES	27"
WIDTH	INCHES	29-3/4"
APPROXIMATE NET WEIGHT	LBS.	58
APPROXIMATE SHIP WEIGHT	LBS.	66
CLEARANCES		
TOP	INCHES	1
FLUE CONNECTOR	INCHES	6
ACCESS PANEL	INCHES	18
NON-ACCESS SIDE	INCHES	1
BOTTOM	INCHES	1
REAR	INCHES	18

NOTES	
1	HEATING ONLY THERMOSTAT
2	
3	

DEHUMIDIFICATION UNIT

SYMBOL	DH-1
MANUFACTURER	DECTRON
INDOOR UNIT MODEL NUMBER DH-1	DS-010-NP-I-A3NH0601N0A2AN0H
OUTDOOR UNIT MODEL NUMBER CU-1	NC-B-1V-AUCSMO-V
DESIGN DATA	
OUTDOOR AIR (CFM)	100
ESP	0.5 INCHES
ROOM CONDITIONS (Deg. F DB / % RH)	82 / 50
UNIT TOTAL AIR FLOW (CFM)	600
ELECTRICAL DATA	
UNIT VOLTAGE (V/Ph/Hz)	208V / 1Ph / 60 Hz
UNIT FULL LOAD AMPS - FLA (A)	17
UNIT MCA (A) (MIN. CIRCUIT AMPACITY)	21
UNIT MOP (A) (MAX. OVERCURRENT PROTECT)	30
SUPPLY AIR BLOWER	
AIRFLOW (CFM)	600
TYPE	PLENUM
UNIT ESP (in WC)	0.5
NUMBER OF MOTORS	1
MOTOR HP	1.2
MOTOR FLA (A)	4.2
MOTOR DRIVE	DIRECT DRIVE
COMPRESSOR	
TYPE	SCROLL
NUMBER OF COMPRESSORS	1
REFRIGERANT	R410A
MOTOR RLA / LRA (A)	12.8 / 64.0
EVAPORATOR COIL	
SENSIBLE CAPACITY (MBH)	17.3
TOTAL CAPACITY (MBH)	26.1
MOISTURE REMOVAL CAPACITY (Lbs/h)	8.1
CIRCUITS	1
ONDENSATE DRAIN CONNECTION	1.0 Male NPT
REHEAT COIL	
TOAL HEAT REJECTION (MBH)	32.6
RTEMOTE OUTDOOR AIR-COOLED CONDENSER	
MODEL	NC-B-1V
DESIGN AIR ON TEMP (Deg. F.)	95 F
ESTIMATED FIELD CHARGE (lbs R410A)	TBD
RECOMMENDED LINE SET SIZE HG (in OD)	5/8
RECOMMENDED LINE SET SIZE LQ (in OD)	1/2
MAXIMUM LINE LENGTH (ft)	50
VOLTAGE (V/Ph/Hz)	208-230/1/30
NUMBER OF MOTORS	1
MOTOR HP	0.6
MOTOR FLA (A)	2.6
MCA (A)	4
MOP (A)	15
NOTES	
MODEL	2 TON COMPRESSOR DEHUMIDIFIER
UNIT SUBSERIES	NO POOL WATER HEATER
UNIT LOCATION	INDOOR
CABINET	COMPACT (SMALL)
SUPPLY VOLTAGE	208V / 1 PH
UNIT CONTROL	SUPERVISAIRE
REFRIGERANT	R410A
DISCONNECT	NO DISCONNECT
OUTDOOR AIR	OA INLET MOTORIZED DAMPER AND FILTER
EXHAUST FAN	NONE
SPACE HEATING	REMOTE HEATER BY OTHERS
HEAT CONTROL	STANDARD CONTROL SIGNALS: VALVE AND POWER SUPPLY BY OTHERS
AIR CONDITIONING	AIR COOLED A/C - FOR USE WITH REMOTE OUTDOOR AIR COOLED EQUIPMENT
OACC VOLTAGE	208V-230V/1PH
WARRANTY	STANDARD - 2 YR. ON DRIVELINE, COMPRESSOR, AND COILS
SUPPLY AIR (CFM)	600
OUTDOOR AIR (CFM)	100
SUPPLY AIR ORIENTATION	HOROZONTAL (SUPPLY END)
OUTDOOR AIR ORIENTATION	LEFT
CONDENSATE DRAIN	BOTTOM

CEILING MOUNTED EXHAUST FAN

SYMBOL	MANUFACTURER	MODEL NUMBER	TYPE	MIN. AIR FLOW (CFM)	STATIC PRESSURE	SONES	ELECTRICAL			DIMENSIONS			WEIGHT
							V/P/H	WATTS	AMPS	HEIGHT	LENGTH	WIDTH	LBS
EF-1	DELTA BREEZE	SIG80-110H	CLG MTD.	80	0.125	<0.3	120/1/60	6.2	0.38	7-7/8"	9-5/8"	9-5/8"	15

NOTES	
1	BACKDRAFT DAMPER LOCATED WHERE DUCT EXITS THE BUILDING
2	OPERATED BY WALL SWITCH
3	FAN WITH HUMIDITY SENSOR
4	12-3/8" x 12-3/8" FAN GRILLE WITH MOTION SENSOR

ELECTRIC WALL HEATER

SYMBOL	MANUFACTURER	MODEL NUMBER	AIR FLOW	ELECTRICAL			DIMENSIONS			WEIGHT
			CFM	V/P/H	WATTS	AMPS	HEIGHT	LENGTH	DEPTH	LBS
EWH-1	Q-MARK	AWH-3180F	100	120/1/60	1800	15	19-5/16"	15-3/4"	3-7/8"	25
EWH-2	Q-MARK	AWH4408F	100	208/1/60	4000/2000	19.2/9.6	19-5/16"	15-3/4"	3-7/8"	25

NOTES			
1	RECESS MOUNTED	4	HEAVY DUTY GRILLE
2	BUILT-IN DISCONNECT SWITCH	5	INTEGRAL THERMOSTAT
3	THERMAL OVERHEAT PROTECTOR DISCONNECT	6	

DALE R. WILDE CO.
CONSULTING ENGINEERS
428 WINCHESTER SUITE 240
SALT LAKE CITY, UTAH 84107
PHONE 801-433-1125 – EMAIL WILDE@DRWCO.COM

COPYRIGHT
DATE Feb. 15, 2022
THESE DOCUMENTS ARE INSTRUMENTS OF PROFESSIONAL SERVICE AND THE INFORMATION CONTAINED HEREIN IS INCOMPLETE UNLESS IN CONJUNCTION WITH DALE R. WILDE CO. ENGINEER'S INTERPRETATIONS, DECISIONS, OBSERVATIONS AND ADMINISTRATIONS. USE OR REPRODUCTION OF THESE DOCUMENTS IN WHOLE OR IN PART WITHOUT DALE R. WILDE CO. ENGINEER'S CONSENT IS IN VIOLATION OF COMMON LAW. COPYRIGHTS, STATUTORY AND OTHER RESERVED RIGHTS. REFER TO ACT 17 U.S.C. PAR. 511 (1991). WHICH PREEMPTS STATE AND LOCAL PUBLIC RECORD ACTS. REFER TO ACT 17 U.S.C. PAR. 301 (1991).

RatherArchitecture
Professional Corporation
1091 W South Jordan Parkway Suite 250
South Jordan, UT 84095
phone: 801 232-3638
email: john@ratherarchitecture.com

CONTRACTOR

PROJECT and OWNER

ADAM ANDERSON
Garage and Exercise Spa Addition
33 East 100 North
American Fork, UY 84002

REGISTERED PROFESSIONAL ENGINEER
02-15-2023
DALE R. WILDE JR
STATE OF UTAH

REVISION

No.	Description	Date
Orig	For review	10/1/2021
Rev A	For review	10/7/2021
Rev B	Added beam at wall	10/18/2021
Rev C	Added Shower	10/18/2021
Rev D	Owner Changes	11/10/2021
Rev E	Changes	11/13/2021
Rev 0	For Permit	12/22/2021
Rev 1	City Review	02/14/2023

Mechanical Schedule

Project number	1417.175.02
Date Started	Feb. 15, 2022
Drawn by	DBH
Checked by	DRW

M102

Scale As indicated

@DWGFULLNAMEEXT

WATER FIXTURE UNITS

QTY.	FIXTURE	OCCUPANCY	TYPE OF SUPPLY CONTROL	LOAD VALUES, IN WATER SUPPLY FIXTURE UNITS (wsfu) COLD	HOT	TOTAL
1	BATHROOM GROUP	PRIVATE	FLUSH TANK	2.7	1.5	3.6
		TOTAL FIXTURE UNITS		2.7	1.5	3.6
		GALLONS PER MINUTE				8.0
		PIPE SIZE				3/4"

2018 INTERNATIONAL PLUMBING CODE

a FOR FIXTURE NOT LISTED, LOADS SHOULD BE ASSUMED BY COMPARING THE FIXTURE TO ONE LISTED USING WATER IN SIMILAR QUANTITIES AND AT SIMILAR RATES. THE ASSIGNED LOADS FOR FIXTURES WITH BOTH HOT AND COLD WATER SUPPLIES ARE GIVEN FOR SEPARATE HOT AND COLD WATER LOADS AND FOR TOTAL LOAD, THE SEPARATE HOT AND COLD WATER LOADS BEING THREE-FOURTHS OF THE TOTAL LOAD FOR THE FIXTURE IN EACH CASE.

NATURAL GAS REQUIREMENTS

QTY.	FIXTURE	BTUH	CFH
1	UNIT HEATER	30,000	36
1	WATER HEATER	40,000	48
	TOTALS	70,000	84
	BUILDING GAS PRESSURE		4 OZ.
	DEVELOPED PIPE LENGTH		230'-0"
	SIZE OF BUILDING GAS MAIN		1"

DRAINAGE FIXTURE UNITS

QTY.	FIXTURE TYPE	DRAINAGE FIXTURE UNIT VALUE AS LOAD FACTORS	MINIMUM SIZE OF TRAP (inches)
1	BATHROOM GROUP (water closet > 1.6 gpm) f	5.0	-
6	FLOOR DRAIN	12.0	2"
	TOTAL FIXTURE UNITS	17.0	
	PIPE SIZE		4"

2018 INTERNATIONAL PLUMBING CODE

f. FOR FIXTURES ADDED TO A DWELLING UNIT BATHROOM GROUP, ADD THE DFU VALVE OF THOSE ADDITIONAL FIXTURES TO THE BATHROOM GROUP FIXTURE COUNT.

BUILDING DRAINS AND SEWERS

DIAMETER OF PIPE (INCHES)	MAXIMUM NUMBER OF DRAINAGE FIXTURE UNITS CONNECTED TO ANY PORTION OF THE BUILDING DRAIN OR THE BUILDING SEWER, INCLUDING BRANCHES OF THE BUILDING DRAIN. a — SLOPE PER FOOT: 1/16 INCH	1/8 INCH	1/4 INCH	1/2 INCH
1-1/4"			1	1
1-1/2"			3	3
2"			21	26
2-1/2"			24	31
3"		36	42	50
4"		180	216	250

THE MINIMUM SIZE OF ANY BUILDING DRAIN SERVING A WATER CLOSET SHALL BE 3 INCHES.

PLUMBING LEGEND

SYMBOL	DESCRIPTION	ABBREVIATION
	SOIL OR WASTE (ABOVE FLOOR)	S OR W
	SOIL OR WASTE (BELOW GRADE OR FLOOR)	S OR W
WCO	WALL CLEAN OUT	WCO
FCO	FLOOR CLEAN OUT	FCO
CO	CLEAN OUT	CO
COTG	CLEAN OUT TO GRADE	COTG
	VENT	V
	VENT THRU ROOF	VTR
	COLD WATER	CW
	HOT WATER	HW
	RECIRCULATING HOT WATER	RHW
G	NATURAL GAS	G
	AUTOMATIC CONTROL VALVE	
	BACKFLOW PREVENTER	BFP
	BALANCING VALVE	
	BALL VALVE	
	CHECK VALVE	
D	DRAIN	D
	GAS COCK	
	PRESSURE GAUGE	
	RELIEF VALVE	
	STRAINER	
	THERMOMETER	
	THREE WAY MIXING VALVE	
	UNION	
	VALVE IN RISER	

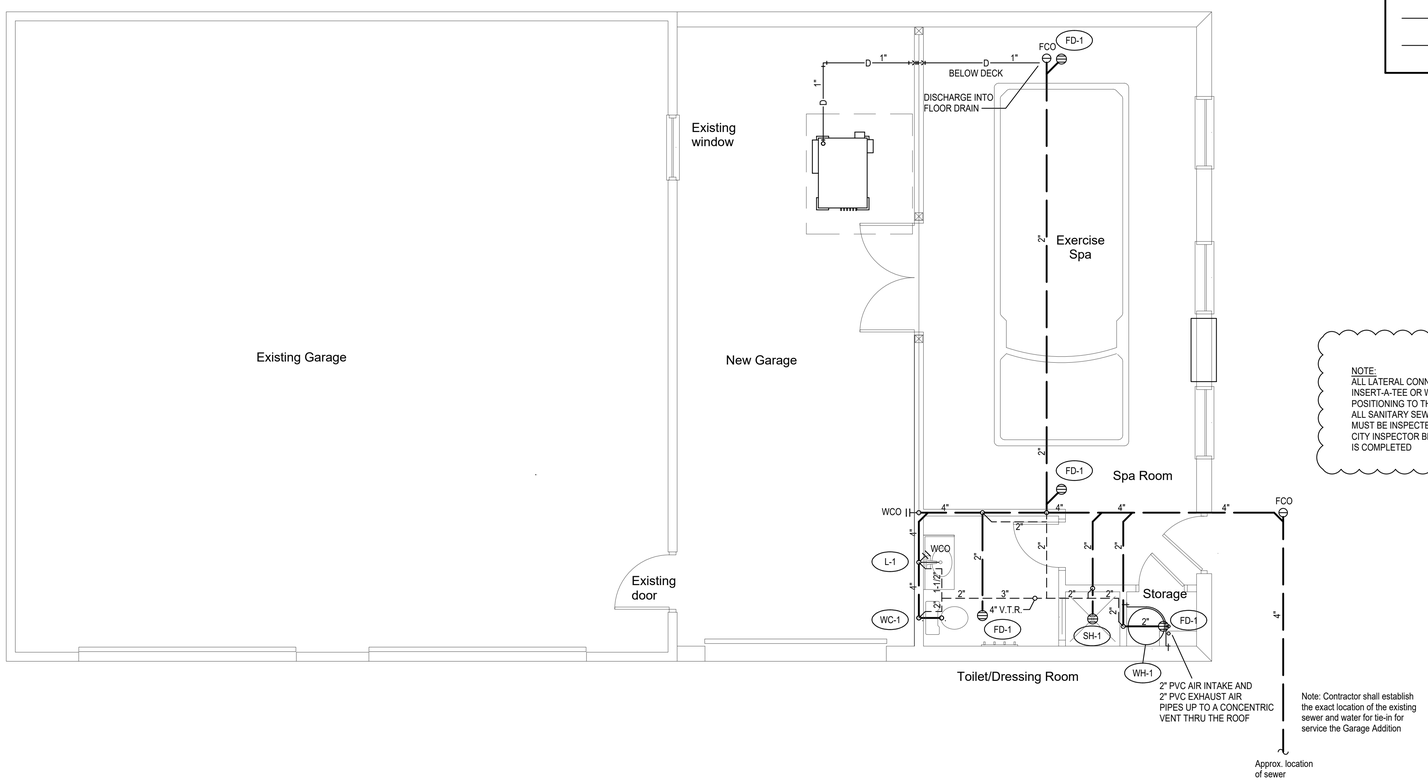

NOTE:
ALL LATERAL CONNECTIONS SHALL BE INSERT-A-TEE OR WYE AT TEN O'CLOCK POSITIONING TO THE CENTER OF THE MAIN LINE. ALL SANITARY SEWER MAINS AND LATERALS MUST BE INSPECTED AND APPROVED BY THE CITY INSPECTOR BEFORE TRENCH BACKFILLING IS COMPLETED

Note: Contractor shall establish the exact location of the existing sewer and water for tie-in for service the Garage Addition

Floor Plan - Waste and Vent Piping

Scale: 1/4" = 1'-0"

North

RatherArchitecture
Professional Corporation
1091 W South Jordan Parkway Suite 250
South Jordan, UT 84095
phone: 801 232-3638
email: john@ratherarchitecture.com

CONTRACTOR

PROJECT and OWNER

ADAM ANDERSON
Garage and Exercise Spa Addition
33 East 100 North
American Fork, UY 84002

REGISTERED PROFESSIONAL ENGINEER 356864-2202 DALE R. WILDE JR. 02-14-2023 STATE OF UTAH

REVISION

No.	Description	Date
Orig	For review	10/1/2021
Rev A	For review	10/7/2021
Rev B	Added beam at wall	10/18/2021
Rev C	Added Shower	10/18/2021
Rev D	Owner Changes	11/10/2021
Rev E	Changes	11/13/2021
Rev 0	For Permit	12/22/2021
Rev 1	City Review	02/14/2023

DALE R. WILDE CO.
CONSULTING ENGINEERS
428 WINCHESTER SUITE 240
SALT LAKE CITY, UTAH 84107
PHONE 801-433-1125 — EMAIL WILDE@DRWCO.COM

COPYRIGHT
DATE Feb. 15, 2022
THESE DOCUMENTS ARE INSTRUMENTS OF PROFESSIONAL SERVICE AND THE INFORMATION CONTAINED HEREIN IS INCOMPLETE UNLESS IN CONJUNCTION WITH DALE R. WILDE CO. ENGINEER'S INTERPRETATIONS, DECISIONS, OBSERVATIONS AND ADMINISTRATIONS. USE OR REPRODUCTION OF THESE DOCUMENTS IN WHOLE OR IN PART WITHOUT DALE R. WILDE CO. ENGINEER'S CONSENT IS IN VIOLATION OF COMMON LAW. COPYRIGHTS, STATUTORY AND OTHER RESERVED RIGHTS. REFER TO ACT 17 U.S.C. PAR. 511 (1991). WHICH PREEMPTS STATE AND LOCAL PUBLIC RECORD ACTS. REFER TO ACT 17 U.S.C. PAR. 301 (1991).

Floor Plan
Waste and Vent Piping

Project number	1417.175.02
Date Started	Feb. 15, 2022
Drawn by	DBH
Checked by	DRW

P101

Scale As indicated

@DWGFULLNAMEEXT

RatherArchitecture
Professional Corporation
1091 W South Jordan Parkway Suite 250
South Jordan, UT 84095
phone: 801 232-3638
email: john@ratherarchitecture.com
CONTRACTOR

PROJECT and OWNER

ADAM ANDERSON
Garage and Exercise Spa Addition
33 East 100 North
American Fork, UY 84002

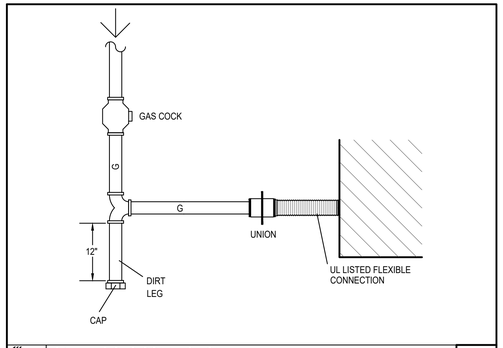

DETAIL GAS CONNECTION | 4
SCALE: NONE | P102

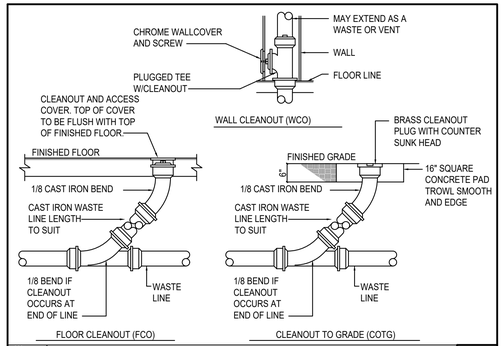

DETAIL CLEANOUTS | 3
SCALE: NONE | P102

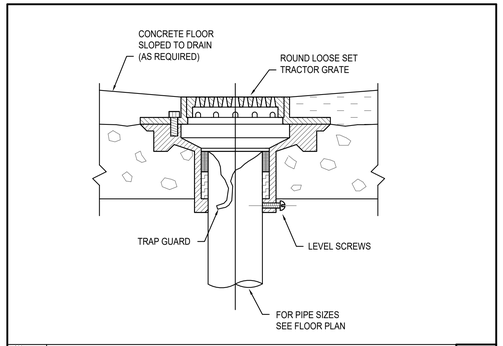

DETAIL FLOOR DRAIN with TRAP GUARD | 2
SCALE: NONE | P1023

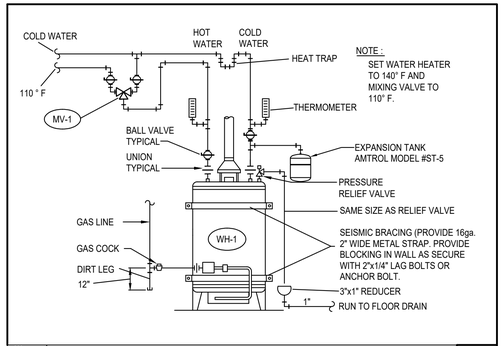

DETAIL WATER HEATER | 1
SCALE: NONE | P102

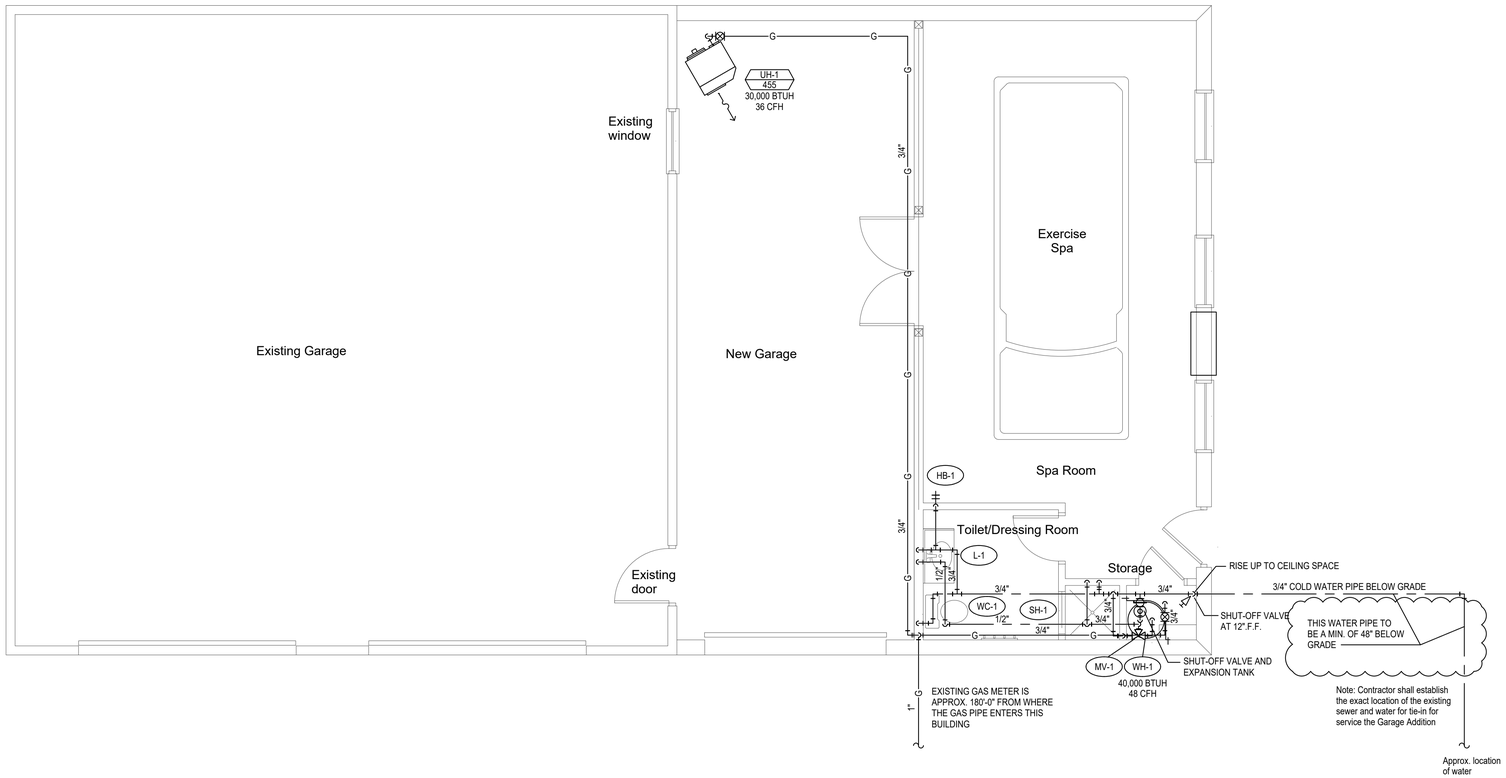

Floor Plan - Water and Gas Piping
Scale: 1/4" = 1'-0"

North

DALE R. WILDE CO.
CONSULTING ENGINEERS
428 WINCHESTER SUITE 240
SALT LAKE CITY, UTAH 84107
PHONE 801-433-1125 - EMAIL WILDE@DRWCO.COM

COPYRIGHT
DATE Feb. 15, 2022

THESE DOCUMENTS ARE INSTRUMENTS OF PROFESSIONAL SERVICE AND THE INFORMATION CONTAINED HEREIN IS INCOMPLETE UNLESS IN CONJUNCTION WITH DALE R. WILDE CO. ENGINEER'S INTERPRETATIONS, DECISIONS, OBSERVATIONS AND ADMINISTRATIONS. USE OR REPRODUCTION OF THESE DOCUMENTS IN WHOLE OR IN PART WITHOUT DALE R. WILDE CO. ENGINEER'S CONSENT IS IN VIOLATION OF COMMON LAW. COPYRIGHTS, STATUTORY AND OTHER RESERVED RIGHTS. REFER TO ACT 17 U.S.C. PAR. 511 (1991). WHICH PREEMPTS STATE AND LOCAL PUBLIC RECORD ACTS. REFER TO ACT 17 U.S.C. PAR. 301 (1991).

REGISTERED PROFESSIONAL ENGINEER
DALE R. WILDE JR.
02-14-2023
STATE OF UTAH

REVISION

No.	Description	Date
Orig	For review	10/1/2021
Rev A	For review	10/7/2021
Rev B	Added beam at wall	10/18/2021
Rev C	Added Shower	10/18/2021
Rev D	Owner Changes	11/10/2021
Rev E	Changes	11/13/2021
Rev 0	For Permit	12/22/2021
Rev 1	City Review	02/14/2023

Floor Plan Water and Gas Piping

Project number	1417.175.02
Date Started	Feb. 15, 2022
Drawn by	JDR
Checked by	NHR

P102

Scale As indicated

@DWGFULLNAMEEXT

PLUMBING FIXTURE SCHEDULE

SYMBOL	FIXTURE	MANUFACTURER	MODEL NUMBER	WASTE	VENT	HOT WATER	COLD WATER
FD-1	FLOOR DRAIN	JOSAM	30000-Z-S	2"	2"		
		J.R. SMITH	2005-A				
		MIFAB	F1100-C-1				
		WADE	W-1102-STD5-1				
		WATTS DRAINAGE	FD-100-A5				
		ZURN	Z-415				
	PRO-VENT SYSTEM TRAP GUARD	J.R. SMITH	2692				
		MIFAB	TG22IP 2"				
		SOIUX CHIEF	TG22SC				
		WADE	TG22P				
		WATTS DRAINAGE	TG22P-W				
		ZURN	TG22P-Z				
	NOTES:	1. CHOOSE ON MANUFACTURER FOR EACH CATEGORY.					
		2. 2" CAST IRON "P" TRAP					
		3. 5" DIAMETER NICKEL BRONZE STRAINER.					
		4. THE TRAP GUARD IS TO MEET ASSE 1072.					
HB-1	HOSE BIBB (INTERNAL)	WOODFORD	24				3/4"
		CHICAGO FAUCET	387				
		MIFAB	HY9000				
		J.R. SMITH	560				
		T&S	B-0737				
		ZURN	Z1341				
	NOTES:	1. CHOOSE ONE MANUFACTURE FOR EACH CATEGORY.					
		2. FOR NON-FREEZING AREA.					
		3. EXTERNAL VACUUM BREAKER					
		4. ALL BRASS- POLISHED CHROME PLATED.					
		5. LOOSE TEE KEY OPERATION HANDLE					
		6. TAMPER PROOF LOCK SHIELD.					
L-1	LAVATORY COUNTERTOP	AMERICAN STANDARD	476.028	1-1/2"	1-1/2"	1/2"	1/2"
		BRIGGS	6534				
		KOHLER	K-2196				
	FAUCET	AMERICAN STANDARD	7385.003				
		BRIGGS/SAYCO	S1503				
		CHICAGO	420-ABCP				
		DELTA	501-DST				
		KOHLER	K-15583-4RA-CP				
		SYMMONS	S-20-IPS				
		MOEN	L4621				
	MIXING VALVE	ACORN CONTROLS	ST70-12				
	STOPS	NIBCO	7105 ANGLE				
		NIBCO	7100 STRAIGHT				
		WATTS B&T					
	SUPPLY	BRASSCRAFT	CHROME PLATED				
		WATTS B&T	CHROME PLATED				
	PROTECTIVE PIPE COVER	TRUEBRO	120-EZ				
	NOTES:	1. CHOOSE ONE MANUFACTURER FOR EACH CATEGORY					
		2. VITREOUS CHINA / SELF-RIMMING					
		3. FAUCET HOLES AT 4" ON CENTER.					
		4. FAUCET WITH FLOW RESTRICTOR AND AERATOR.					
		5. PROVIDE A ASSE 1070 MIXING VALVE UNDER SINK WITH ACCESS DOOR.					
		6. INTEGRAL PERFORATED GRID DRAIN.					
		7. 17 GAUGE CHROME PLATED TUBE "P" TRAP.					
		8. CHROME PLATED SUPPLY PIPES AND STOPS.					
MV-1	MIXING VALVE	LAWLER	570			110 DEG. F. 3/4" 140 DEF. F. 3/4"	3/4"
	NOTES:	1. CHOOSE ONE MANUFACTURE FOR EACH CATEGORY.					
		2. THERMOSTATIC MIXING VALVE. ASSE 1070 CERTIFIED CSA B125.3					
		3. COMBINATION STRAINER, CHECK AND STOPS.					
		4. SET TO MIX 140 DEG. F. WATER TO 110 DEG. F.					
		5. SET AT 17 GPM AT 20 P.S.I. DIFFERENTIAL.					
SH-1	SHOWER FITTING	AMERICAN STANDARD	T675.501 & R120SS			1/2"	1/2"
		KOHLER	K-TS6910-4A-CP				
		MOEN	8325				
		SYMMONS	9601-X-PLR				
	NOTES:	1. CHOOSE ONE MANUFACTURER FOR EACH CATEGORY.					
		2. PRESSURE BALANCED.					
		3. 2-1/2 GPM SHOWER HEAD WITH FLOW RESTRICTOR.					
		4. BALL JOINT, ARM AND ESCUTCHEON.					
		5. SINGLE LEVEL HANDLE.					
		6. SERVICE STOPS AND VACUUM BREAKER.					
		7. CHROME FINISH.					
WC-1	WATER CLOSET FLOOR TYPE TANK TYPE	AMERICAN STANDARD	215CA.104	4"	2"		1"
		KOHLER	K-3531				
		TOTO	CST744E				
	SEAT	AMERICAN STANDARD	5257.115.020				
		BEMIS	1100TT				
		BENEKE	520				
		CHURCH	380				
		COMFORT SEATS	C8019				
	STOPS	NIBCO	7105 ANGLE				
		NIBCO	7100 STRAIGHT				
	SUPPLY	BRASSCRAFT	CHROME PLATED				
		WATTS B&T	CHROME PLATED				
	NOTES:	1. CHOOSE ONE MANUFACTURER FOR EACH CATEGORY.					
		2. 1.28 GALLONS PER FLUSH.					
		3. VITREOUS CHINA.					
		4. ELONGATED BOWL - TANK TYPE.					
		5. SEAT WITH LID, STAINLESS STEEL HINGE POST AND CHECK.					
		6. CHROME PLATED SUPPLY PIPE AND STOPS.					
WH-1	40 GALLON GAS FIRED WATER HEATER	BRADFORD WHITE	RG2PDV40T6N			3/4"	3/4"
	EXPANSION TANK	AMTROL	ST-12				
		ELBI	XT-15				
		WATTS REGULATOR	DET-12				
	PRESSURE RELIEF VALVE	WATTS REGULATOR	40L				
	NOTES:	1. CHOOSE ONE MANUFACTURER FOR EACH CATEGORY.					
		2. RECOVERY RATE OF 43 G.P.H. AT A 100 DEGREE F. TEMPERATURE RISE.					
		3. 40 GALLON GLASS LINED STORAGE TANK.					
		4. ENAMELED STEEL JACKET WITH HIGH DENSITY FIBERGLASS INSULATION.					
		5. 150 P.S.I. WORKING PRESSURE.					
		6. 40,000 BTUH - NATURAL GAS - 2" PVC AIR INTAKE AND 2" PVC EXHAUST AIR.					
		7. DEDICATED 120 VOLT ELECTRICAL CIRCUIT FOR THE SPARK IGNITION.					
		8. ASME AND U.L. LISTED.					
		9. SET WATER TEMPERATURE AT 140 DEGREE F.					
		10. 5 YEAR WARRANITY.					
		11. WATER HEATER TO BE 80% EFFICIENCY MIN.					
		12. SEE DETAIL ON DRAWING.					

PLUMBING GENERAL NOTES

CODES RULES AND REGULATIONS:

ALL WORK SHALL CONFORM TO ALL APPLICABLE LOCAL AND STATE CODES.

WHENEVER INDICATED MATERIAL WORKMANSHIP, ARRANGEMENT OR CONSTRUCTION IS OF HIGHER QUALITY OR CAPACITY THAN THAT REQUIRED BY THE ABOVE CODES, THE DRAWING AND OR SPECIFICATION SHALL GOVERN.

SHOULD THERE BE ANY DIRECT CONFLICT BETWEEN THE STATE OR LOCAL CODES, LAWS OR REGULATION AND THE DRAWING AND OR SPECIFICATIONS THE CODES, LAWS OR REGULATIONS SHALL GOVERN.

STANDARDS:

INTERNATIONAL BUILDING CODE 2018 EDITION
INTERNATIONAL PLUMBING CODE 2018 EDITION
INTERNATIONAL MECHANICAL CODE 2018 EDITION
INTERNATIONAL FUEL GAS CODE 2018 EDITION
THE STATE OF UTAH " BOILER AND PRESSURE VESSEL REGULATIONS"

EXAMINATION OF SITE:

THE CONTRACTOR SHALL CAREFULLY EXAMINE THE DRAWINGS AND THE SITE AND FAMILIARIZE THEMSELVES WITH ALL EXISTING CONDITIONS BEFORE SUBMITTING ANY PROPOSAL. NO ADDITION COST WILL BE ALLOWED FOR FAILURE TO VISIT THE SITE.

WORKING DRAWINGS AND MEASUREMENTS:

THESE DRAWINGS ARE GENERALLY DIAGRAMMATIC. THEY DO NOT SHOW EVER OFFSET AND BEND THAT MAY BE NEEDED TO INSTALL THE WORK. THE CONTRACTOR SHALL COORDINATE THE DRAWINGS OF ALL OTHER TRADES INCLUDING BUT NOT LIMITED TO THE CIVIL, ARCHITECTURAL, ELECTRICAL, AND STRUCTURAL. THESE DRAWINGS SHALL NOT BE SCALED FOR ROUGH IN OR AS SHOP DRAWINGS.

EQUIPMENT SUBMITTALS:

PROVIDE ALL AT ONE TIME IN A THREE RING BINDER SIX COPIES OF EQUIPMENT PROPOSED TO BE USED ON THIS PROJECT.

REGARDLESS OF ANY INFORMATION OUTLINED IN THE SUBMITTALS OR SHOP DRAWINGS, THE REQUIREMENTS OF THE DRAWINGS MUST FOLLOWED AND AR NOT WAIVED OR SUPERSEDED IN ANY WAY BY THE SUBMITTALS OR SHOP DRAWING REVIEW.

CAULKING AND SEALING:

ALL SPACES BETWEEN PIPES AND SLEEVES THROUGH FIRE WALLS, FIRE PARTITIONS, FLOORS, AND CEILINGS SHALL CAULKED WITH ONE INCH FILL OF 3M "FIRE BARRIER". CAULKING MUST BE ON BOTH SIDES OF FIRE RATED WALLS.

SUPERVISION AND WORKMANSHIP:

PROVIDE THE SERVICES OF AN EXPERIENCED FORMAN WHO SHALL BE IN CHARGE OF ALL INSTALLATION.

ALL WORKMANSHIP SHALL BE OF FIRST QUALITY. NONE BUT COMPETENT MECHANICS SHALL BE EMPLOYED IN THE WORK. SHODDY WORKMANSHIP WILL BE CAUSE FOR REJECTION AND REPLACEMENT OF WORK WITHOUT ADDITIONAL COST.

COOPERATION WITH OTHER TRADES:

REFER TO ALL THE DRAWINGS COVERING WORK OF ALL TRADES, WHICH IS CARRIED ON IN CONJUNCTION WITH THE WORK SUCH THAT ALL WORK CAN PROCEED WITHOUT INTERFERENCE RESULTING FROM LACK OF COORDINATION.

MANUFACTURERS INSTRUCTIONS:

THE CONTRACTOR SHALL FOLLOW THE MANUFACTURERS INSTALLATION INSTRUCTION EXPLICITLY IN THE INSTALLATION OF ALL ITEMS OF EQUIPMENT.

COMPLETION REQUIREMENTS:

ALL SYSTEMS SHALL BE TESTED BY THE CONTRACTOR TO DEMONSTRATE THE ALL EQUIPMENT FURNISHED AND INSTALLED OR CONNECTED FUNCTION IN THE MANNER REQUIRED.

ADJUSTMENTS, OPERATION, ETC. ADJUST ALL REGULATORS, FAUCETS, ETC. OPEN AND CLOSE ALL VALVES SEVERAL TIMES TO INSURE SEAL.

CLEANING:

THIS CONTRACTOR SHALL CLEAN ALL EXPOSED PIPING, INSULATED MEMBERS, FIXTURES AND EQUIPMENT INSTALLED AND LEAVE READY FOR PAINTING. REFINISH AND DAMAGED FINISH AND LEAVE IN PROPER WORKING ORDER.

GUARANTEE:

BY THE ACCEPTANCE OF AN CONTRACT AWARD FOR THE WORK HEREIN DESCRIBED OR SHOWN ON THE DRAWINGS, THE CONTRACTOR ASSUMES THE FULL RESPONSIBILITY IMPOSED BY THE GUARANTEE AS SET FORTH HEREIN, AND SHALL PROTECT HIMSELF THROUGH PROPER GUARANTEES FROM EQUIPMENT VENDORS AND FROM SUBCONTRACTORS AS THEIR INTERESTS MAY APPEAR.

1. THAT THE ENTIRE PLUMBING SYSTEMS SHALL BE QUIET IN OPERATION.
2. THAT THE CIRCULATION OF WATER SHALL BE COMPLETE AND EVEN INCLUDING THE DOMESTIC HOT WATER SYSTEM.
3. THAT HE WILL MAKE PROMPTLY UPON NOTICE, FREE OF CHARGE, ANY REPAIRS NECESSARY DUE TO DEFECTIVE MATERIALS OR MATERIALS OR WORKMANSHIP THAT MAY OCCUR DURING A PERIOD OF ONE YEAR FROM THE DATE OF SUBSTANTIAL COMPLETION.

THE EXISTING UTILITY CONNECTIONS HAVE BEEN DETERMINED BASED ON THE INFORMATION AVAILABLE. NO DESTRUCTIVE DEMOLITION HAS BEEN PERFORMED TO CONFIRM THE EXISTENCE AND OR LOCATION OF THE EXISTING CONDITIONS. THE CONTRACTOR IS RESPONSIBLE FOR VERIFYING THE EXISTING CONDITIONS PRIOR TO START OF WORK. ANY DIVINATION FROM THE CONDITIONS SHOWN ON THE DRAWINGS SHALL BE BROUGHT TO THE ATTENTION OF THE ARCHITECT FOR EVALUATION AND DIRECTION. THE COST OF REMEDIAL WORK DUE TO FAILURE OF THE CONTRACTOR TO VERIFY THE EXISTING CONDITIONS PRIOR TO THE START OF WORK WILL BE BOURNE BY THE CONTRACTOR.

PLUMBING PIPING SCHEDULE

NOTES:

GRADE ALL DOMESTIC WATER PIPING TO DRAIN. PROVIDE DRAIN AT ALL LOW POINTS WITH HOSE CONNECTION AND CAP. GRADE ALL WASTE AND VENT PIPING TO CONFORM TO THE INTERNATIONAL PLUMBING CODE.

ALL PIPING SHALL BE SUPPORTED WITH CLEVIS HANGERS ON THE FOLLOWING SPACING:

STEEL PIPE 1" AND SMALLER	5 FEET
STEEL PIPE 1-1/4" AND LARGER	10 FEET
COPPER TUBING 1-1/4" AND SMALLER	5 FEET
COPPER TUBING 1-1/2" AND LARGER	10 FEET
PLASTIC PIPE	3 FEET

CAST IRON SOIL PIPE - SUPPORT AT EACH JOINT AND AT INTERVALS NOT TO EXCEED 5 FEET.

HANGER ROD SIZING AS FOLLOWS:

PIPE SIZE	ROD SIZE
1/2" TO 2"	3/8"
2-1/2" TO 3"	1/2"
4" AND LARGER	5/8"

PROVIDE INSULATION PROTECTION SHIELDS AT ALL HANGERS.
PROVIDE ISOLATION VALVES AND UNIONS AT ALL EQUIPMENT.
PROVIDE DIELECTRIC UNIONS BETWEEN DISSIMILAR PIPE MATERIALS.

BACK FILL AND COMPACT ALL TRENCHING TO PREVENT SETTLEMENT AND TO PROPERLY SUPPORT BELOW GRADE PIPING.

PLASTIC PIPING IN AIR PLENUMS IS PROHIBITED. ALL MATERIAL LOCATED IN AIR PLENUMS MUST HAVE SURFACE BURNING CHARACTERISTICS NOT EXCEEDING FLAME SPREAD 25 AND SMOKE GENERATED 50.

SYMBOL	DESCRIPTION
HW CW HWR	DOMESTIC HOT WATER PIPING DOMESTIC COLD WATER PIPING DOMESTIC HOT WATER RECIRCULATING PIPING COPPER TUBE BELOW GRADE: TYPE K HARD DRAWN COPPER CONFORMING TO ANSI H23.1 COPPER TUBE ABOVE GRADE: TYPE L HARD DRAWN COPPER CONFORMING TO ANSI H23.1 COPPER TUBE FITTINGS: 2-1/2" AND SMALLER: WROUGHT COPPER, SOLDER JOINT PRESSURE FITTINGS CONFORMING TO ASME B16.22 SOLDER WITH NON LEAD SOLDER IN ACCORDANCE WITH THE REQUIREMENTS OF THE COPPER DEVELOPMENT ASSOCIATION'S "THE COPPER TUBE HANDBOOK" INCLUDING REAMING AND DE-BURRING. 3" AND LARGER: WROUGHT COPPER AND BRONZE GROOVED END FITTINGS CONFORMING TO ASTM B75 TUBE AND ASTM B584 BRONZE CASTINGS. COUPLING FOR GROOVED END COPPER TUBE AND GROOVED END COPPER FITTINGS CONSISTING OF ASTM A 536 DUCTILE IRON OR ASTM A 47 MALLEABLE IRON HOUSING HAVING COPPER COLORED ENAMEL FINISH WITH SYNTHETIC RUBBER GASKET HAVING CENTRAL CAVITY PRESSURE RESPONSIVE DESIGN AND SUITABLE FOR SERVICE.
W GW V	WASTE PIPING GREASE WASTE PIPING VENT PIPING PLASTIC PIPE: POLY (VINYL CHLORIDE) (PVC) ASTM D 2665 SOLID CORE SCHEDULE 40 PLAIN ENDS. ACRYLONITRILE BUTADIENE STYRENE (ABS) ASTM D 2661 SOLID CORE SCHEDULE 40 PLAIN ENDS CAST IRON: SERVICE WEIGHT CAST IRON COATED HUB LESS SOIL PIPE CONFORMING TO THE REQUIREMENTS OF CISPI STANDARD 301, ASTM A888 OR ASTM A74. PIPE FITTINGS: PVC: DWV PIPE FITTINGS CONFORMING TO ASTM D 2665 MADE TO ASTM D3311 SOCKET-TYPE DRAIN WASTE AND VENT PIPE PATTERNS. SOLVENT CEMENTS: ASTM D 2564 AND ASTM F 656 PRIMER PVC TO ABS TRANSITION ASTM D 3138 COLOR OTHER THAN ORANGE ABS: DWV PIPE FITTINGS CONFORMING TO ASTM D 2661 SOLID CORE MADE TO ASTM D 3311 SOCKED-TYPE DRAIN WASTE AND VENT PIPE PATTERNS SOLVENT CEMENT: ASTM D 2235 CAST IRON: HUBLESS CAST IRON CONFORMING TO CISPI 310 HAVING ASTM C 564 NEOPRENE SEALING SLEEVE WITH 300 SERIES STAINLESS STEEL CORRUGATED SHIELD AND CLAMP ASSEMBLY.
G	NATURAL GAS PIPING STEEL PIPE: 4" AND SMALLER, SCHEDULE 40 OR SCHEDULE 80 BLACK CONFORMING TO ASTM-A53 GRADE A. SIZE 5" AND LARGER, SCHEDULE 40 OR SCHEDULE 80 BLACK CONFORMING TO ASTM-A53 GRADE F. STEEL PIPE FITTINGS: 2' AND SMALLER, MALLEABLE THREADED FITTINGS, ANSI B16.3, CLASS 150 STANDARD PATTERN FOR THREADED FITTINGS. THREADS SHALL CONFORM TO ANSI B1.20.1. 2-1/2" AND LARGER, SCHEDULE 40 WROUGHT STEEL WELDING FITTINGS CONFORMING TO ANSI B16.28.

PLUMBING PIPING SCHEDULE

SYMBOL	DESCRIPTION
D	CONDENSATE DRAIN DOMESTIC TYPE L HARD DRAWN COPPER CONFORMING TO ANSI H23.1 COPPER TUBE FITTINGS: 2-1/2" AND SMALLER: WROUGHT COPPER, SOLDER JOINT PRESSURE FITTINGS CONFORMING TO ASME B16.22 SOLDER WITH NON LEAD SOLDER IN ACCORDANCE WITH THE REQUIREMENTS OF THE COPPER DEVELOPMENT ASSOCIATION'S "THE COPPER TUBE HANDBOOK" INCLUDING REAMING AND DE-BURRING.

PLUMBING INSULATION SCHEDULE

NOTES:

ALL INSULATION SHALL HAVE SURFACE BURNING CHARACTERISTICS, AS TESTED BY ASTM E84, UL723 OR NFPA 255 NOT EXCEEDING : FLAME SPREAD 25 AND SMOKE DEVELOPED 50.

COMPOSITE SHALL INCLUDE INSULATION JACKETING AND ADHESIVES USED TO SECURE JACKETING OR FACING. ALL ACCESSORY ITEMS SUCH AS PVC JACKETING AND FITTINGS, ADHESIVES, MASTIC, CEMENT, TAPE AND CLOTH SHALL HAVE SAME COMPONENT RATING AS ABOVE.

PIPE INSULATION:

FIBERGLASS SECTIONAL PIPE INSULATION: THERMAL CONDUCTIVITY OF 0.23 BUT-IN PER SQ FT PER HOUR AT 75 DEG F MEAN TEMPERATURE. MINIMUM DENSITY OF 2 LBS PER CUBIC FOOT. JACKETED WITH WHITE VAPOR BARRIER LAMINATED OF ALUMINUM FOIL AND WHITE KRAFT REINFORCED WITH GLASS FIBER STRANDS. JACKET SHALL HAVE FACTOR APPLIED SELF-SEALING LAP.

PLASTIC INSULATION FITTING COVERS:

FACTORY FABRICATED FINNTING COVERS MANUFACTURED FROM 30-MIL THICK, HIGH-IMPACT ULTRAVIOLET RESISTANT PVC.

PIPE INSULATION INSTALLATION:

INSTALLATION SHALL BE CONTINUOUS THROUGH WALLS, FLOORS, PARTITIONS, SLEEVES AND PIPE HANGERS.

APPLY INSULATION TO PIPE AND SEAL WITH SELF-SEALING LAP. USE SELF-SEALING BUTT STRIPS TO SEAL BUTT JOINTS. INSULATION NOT REQUIRED OVER UNION, AND VALVE BODIES ON DOMESTIC HOT WATER.

INSTALL PLASTIC FITTING COVERS IN ACCORDANCE WITH MANUFACTURERS INSTALLATION INSTRUCTIONS.

INSULATION INSTALLED OUTSIDE SHOULD BE COVERED WITH ALUMINUM JACKET.

PIPE INSULATION THICKNESS:

INSULATION THICKNESS	RUN OUTS TO 2"	1" AND LESS	1-1/4" TO 2"	2-/2" TO 4"	5" TO 6"
DOMESTIC HOT WATER	1/2"	1"	1"	1-1/2"	1-1/2"
DOMESTIC HOT WATER RECIRCULATING	1/2"	1"	1"	1-1/2"	1-1/2"
DOMESTIC COLD WATER	1/2"	1/2"	1/2"	1/2"	1/2"
ROOF DRAINS	1/2"	1/2"	1/2"	1/2"	1/2"

GENERAL NOTES

COORDINATE ALL SUSPENDED EQUIPMENT WITH ARCHITECTURAL REFLECTED CEILING PLAN.

IT IS THE RESPONSIBILITY OF THE PLUMBING CONTRACTOR TO COORDINATE HIS WORK WITH ALL OTHER TRADES.

COORDINATE ALL ROOF PENETRATIONS WITH STRUCTURAL DRAWINGS.

ALL FIXTURES ARE DESIGNED TO BE FIXED IN POSITION SHALL BE SECURELY FASTENED IN PLACE.

ALL QUESTION MUST BE SUBMITTED TO THE ARCHITECT IN THE FORM OF AN RFI. ANY RFI SENT DIRECTLY TO ENGINEER WILL BE RETURNED UNREAD.

ANY RFI's THAT HAVE BEEN CORRECTED OR APPROVED BY THE ENGINEER WILL BE JUST FOR CLARIFICATION, AND DOES NOT CONSTITUTE A CHANGE ORDER.

CHANGE ORDERS MUST BE SUBMITTED TO THE ARCHITECT, THE CHANGE ORDER SHALL BE COMPLETE BY LISTING THE FINAL PRICING WITH PROPER BREAKDOWN AND DOCUMENTATION. POSSIBLE TIME EXTENSION OR DELAY AND THE ASSOCIATED COST FOR THE TIME EXTENSION OR DELAY. MATERIAL AND LABOR COST.

RFI's WITH BE RETURNED TO ARCHITECT FROM ENGINEER WITHIN 5 WORKING DAYS.

CHANGE ORDERS WILL BE RETURNED TO ARCHITECT FROM ENGINEER WITHIN 15 DAYS.

DO NOT PROCEED WITH RFI UNTIL CHANGE ORDER HAS BEEN APPROVED BY ARCHITECT, OWNER AND ENGINEER. IF CONTRACTOR DOES SO IT WILL BE AT THERE OWN RISK.

IF TIME EXTENSIONS AND/OR DELAYS ARE INCURRED DUE TO FAILURE TO ISSUE AN RFI, CHANGE REQUEST, CHANGE ORDER, OR IMPROPER AND/OR INCOMPLETE DOCUMENTATION THE COST ASSOCIATED WITH THE DELAY WILL BE BORNE BY THE CONTRACTOR.

RatherArchitecture
Professional Corporation
1091 W South Jordan Parkway Suite 250
South Jordan, UT 84095
phone: 801 232-3638
email: john@ratherarchitecture.com

CONTRACTOR

PROJECT and OWNER

ADAM ANDERSON
Garage and Exercise Spa Addition

33 East 100 North
American Fork, UY 84002

REGISTERED PROFESSIONAL ENGINEER
DALE R. WILDE JR.
02-14-2023
STATE OF UTAH

REVISION

No.	Description	Date
Orig	For review	10/1/2021
Rev A	For review	10/7/2021
Rev B	Added beam at wall	10/18/2021
Rev C	Added Shower	10/18/2021
Rev D	Owner Changes	11/10/2021
Rev E	Changes	11/13/2021
Rev G	For Permit	12/22/2021
Rev I	City Review	02/14/2023

DALE R. WILDE CO.
CONSULTING ENGINEERS
428 WINCHESTER SUITE 240
SALT LAKE CITY, UTAH 84107
PHONE 801-433-1125 - EMAIL WILDE@DRWCO.COM

COPYRIGHT
DATE Feb. 15, 2022
THESE DOCUMENTS ARE INSTRUMENTS OF PROFESSIONAL SERVICE AND THE INFORMATION CONTAINED HEREIN IS INCOMPLETE UNLESS IN CONJUNCTION WITH DALE R. WILDE CO. ENGINEER'S INTERPRETATIONS, DECISIONS, OBSERVATIONS AND ADMINISTRATIONS. USE OR REPRODUCTION OF THESE DOCUMENTS IN WHOLE OR IN PART WITHOUT DALE R. WILDE CO. ENGINEER'S CONSENT IS IN VIOLATION OF COMMON LAW. COPYRIGHTS, STATUTORY AND OTHER RESERVED RIGHTS. REFER TO ACT 17 U.S.C. PAR. 511 (1991). WHICH PREEMPTS STATE AND LOCAL PUBLIC RECORD ACTS. REFER TO ACT 17 U.S.C. PAR. 301 (1991).

Plumbing Notes and Schedules

Project number	1417.175.02
Date Started	Feb. 15, 2022
Drawn by	JDR
Checked by	NHR

P103

Scale As indicated

@DWGFULLNAMEEXT

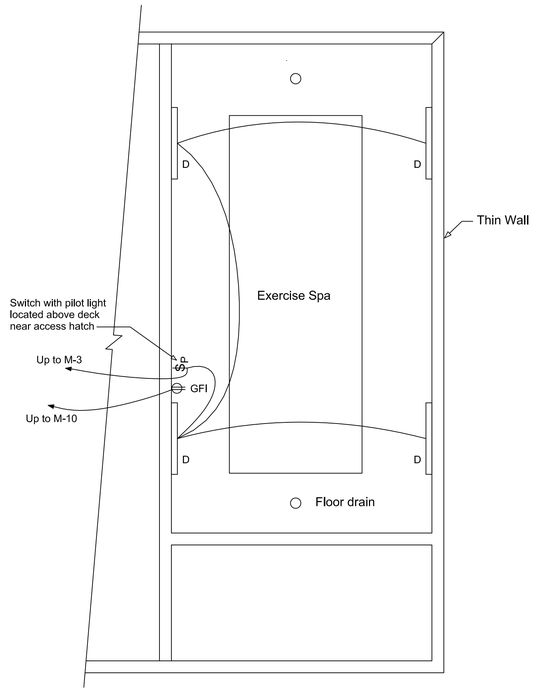

Below Deck Electrical Plan
Scale: 1/4" = 1'-0"

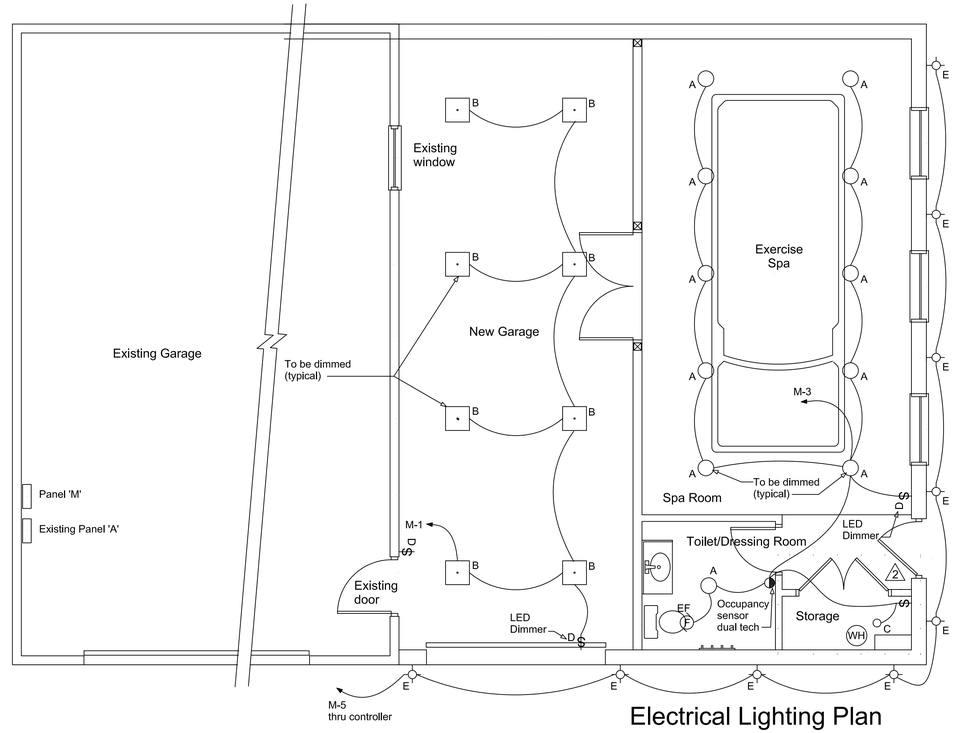

Electrical Lighting Plan
Scale: 1/4" = 1'-0"

ELECTRICAL SPECIFICATIONS

1. FURNISH LABOR AND MATERIALS FOR A COMPLETE JOB.
2. ALL WORK, MATERIALS, EQUIPMENT AND LABOR SHALL COMPLY IN ALL RESPECTS WITH THE REQUIREMENTS OF ALL FEDERAL, COUNTY, CITY AND STATE OF UTAH APPLICABLE ORDINANCES, REGULATIONS AND CODES, INCLUDING REGULATIONS OF SERVING UTILITIES. IN ADDITION THE FOLLOWING PUBLISHED STANDARDS SHALL BE ADHERED TO:

   SMACNA DUCT CONSTRUCTION STANDARDS
3. SECURE ALL PERMITS, LICENSES, FEES AND SERVICE CHARGES.
4. ALL WIRING SHALL BE DONE ACCORDING TO ALL GOVERNING CODES.
5. FITTINGS SHALL MEET ALL GOVERNING CODES.
6. CONDUCTORS - COPPER NO. 12 OR LARGER.
7. CONNECTORS - STEEL SPRING WIRE CONNECTORS OR PRESSURE TYPE TERMINAL LUGS.
8. SWITCHES AND RECEPTACLES ARE 20 AMPERE SPEC, GRADE AND SWITCHES ARE SINGLE POLE WHERE NOT INDICATED OTHERWISE.
9. OUTLET BOXES AND JUNCTION BOXES SHALL BE OF GALVANIZED STEEL OF CORRECT SIZE AND SHAPE.
10. CIRCUIT BREAKERS SHALL BE BOLT-ON TYPE AND ALL FUSES SHALL BE TIME DELAY SIZED FOR LOAD SERVED.
11. ALL FIXTURES SHALL BE FASTENED SECURELY IN PLACE WITH SEISMIC TIES AS PER CODE.
12. FINAL CONNECTIONS TO ALL EQUIPMENT SHALL BE PER MANUFACTURE'S APPROVED WIRING DIAGRAMS, DETAILS AND INSTRUCTIONS. IT SHALL BE THE ELECTRICAL CONTRACTOR'S RESPONSIBILITY TO PROVIDE MATERIALS AND EQUIPMENT COMPATIBLE WITH EQUIPMENT ACTUALLY SUPPLIED.
13. FINAL CONNECTIONS TO ALL MOTORS, AND OTHER VIBRATION EQUIPMENT SHALL BE WITH SEAL TITE FLEX AND APPROVED FITTINGS.
14. ALL PLUG RECEPTACLES IN AREAS WITH CONCRETE FLOORS SHALL BE GFCI PROTECTED.

Luminaire Schedule

Qty	Label	Description	Lum. Watts
22	A	ELCO: ELSP12-CT3-W	22
8	B	LSI: SFP22-LED-FS-UNV-SMK22	40
8	C	ELCO: ELSP43-CT3-W	10
8	D	LSI: SDL4-LED-20L-FL-UNV-DIMI-80CRI-40-WG	15.2
9	E	WESTINGHOUSE: 6315600	10

Electrical Symbols

- WP Weatherproof
- Light switch
- D LED Dimmer
- P Switch with Pilot Light
- Occupancy Sensor Duel Tech.
- 120 V convenience outlet
- GFCI Ground Fault Interuptor
- EF Exhaust fan (furnished and installed by Mechanical Contractor)
- Motor connection
- Motor Disconnect Switch

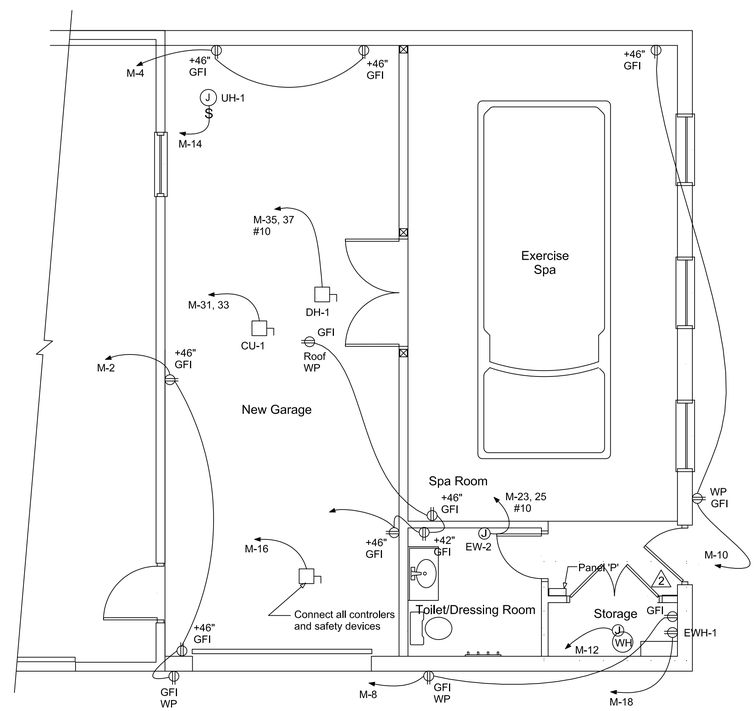

Electrical Power Plan
Scale: 1/4" = 1'-0"

RatherArchitecture
Professional Corporation
1091 W South Jordan Parkway Suite 250
South Jordan, UT 84095
phone: 801 232-3638
email: john@ratherarchitecture.com

CONTRACTOR

PROJECT and OWNER

ADAM ANDERSON Garage and Exercise Spa Addition

33 East 100 North
American Fork, UY 84002

REGISTERED PROFESSIONAL ENGINEER
No. 154867
DEAN PAUL LEVORSEN
STATE OF UTAH
11/28/2022

REVISION

No.	Description	Date
Orig	For review	10/1/2021
Rev A	For review	10/7/2021
Rev B	Added beam at wall	10/18/2021
Rev C	Added Shower	10/18/2021
Rev D	Owner Changes	11/10/2021
Rev E	Changes	11/13/2021
Rev 0	For Permit	12/22/2021
Rev 1	Struct., Mech, and Elect. Added	2/14/2022
Rev 2	Struct., Mech, and Elect. Added	2/14/2022
Rev 3	Plan Review Changes	11/28/2022

Power and Lighting Plan

Project number	1417.175.02
Date Started	29 Sep 2021
Drawn by	JDR
Checked by	NHR

E101

Scale As Indicated

@DWGFULLNAMEEXT

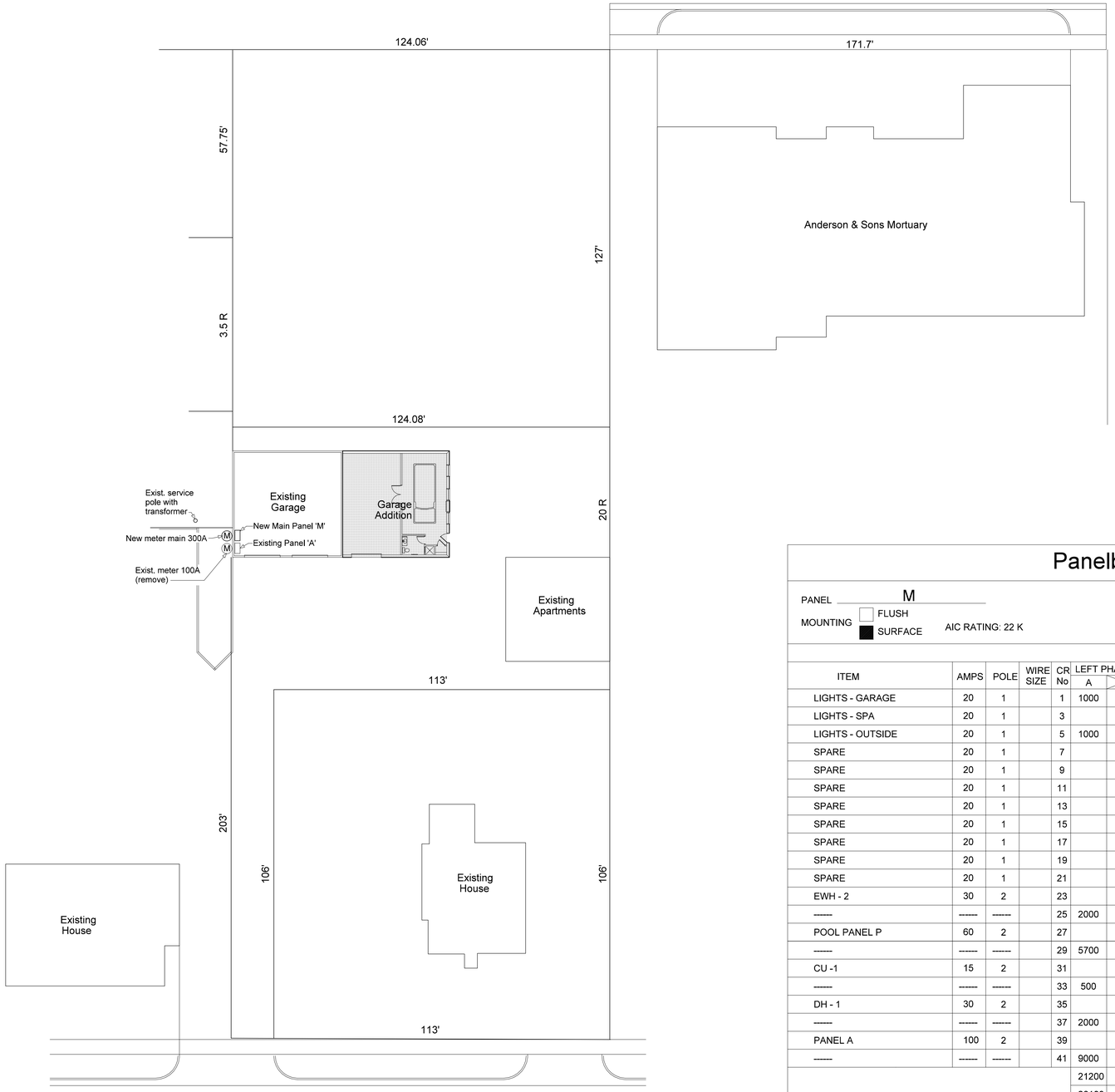

Electrical Site Plan

Scale: 1" = 20'

North

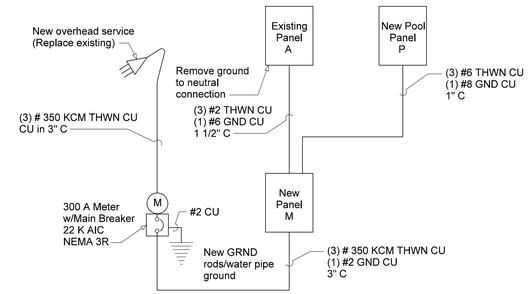

Single Line Diagram

No Scale

Panelboard Schedule

ANDERSON GARAGE ADDITION

PANEL M

MOUNTING ☐ FLUSH ■ SURFACE

AIC RATING: 22 K

120/240 VOLTS 1 PH 3 W

LOCATION Existing Garage 300 AMP MAINS

BRANCH BREAKERS

ITEM	AMPS	POLE	WIRE SIZE	CR No	LEFT PHASE LOAD A		C	RIGHT PHASE LOAD A		C	CR No	WIRE SIZE	POLE	AMPS	ITEM
LIGHTS - GARAGE	20	1		1	1000			1000			2		1	20	RCPTS - GARAGE
LIGHTS - SPA	20	1		3			1000			1000	4		1	20	RCPTS - GARAGE
LIGHTS - OUTSIDE	20	1		5	1000			1000			6		1	20	RCPTS - GARAGE
SPARE	20	1		7						1000	8		1	20	RCPTS - MECH
SPARE	20	1		9				1000			10		1	20	RCPTS - SPA
SPARE	20	1		11						1000	12		1	20	WH -1
SPARE	20	1		13				100			14		1	20	UH - 1
SPARE	20	1		15						1100	16		1	20	DOOR MOTOR
SPARE	20	1		17				1800			18		1	20	EWH -1
SPARE	20	1		19							20				SPACE
SPARE	20	1		21							22				SPACE
EWH - 2	30	2		23			2000				24				SPACE
------	------	------		25	2000						26				SPACE
POOL PANEL P	60	2		27			5700				28				SPACE
------	------	------		29	5700						30				SPACE
CU -1	15	2		31			500				32				SPACE
------	------	------		33	500						34				SPACE
DH - 1	30	2		35			2000				36				SPACE
------	------	------		37	2000						38				SPACE
PANEL A	100	2		39			9000				40				SPACE
------	------	------		41	9000						42				SPACE
					21200		20200	4900		3200					
					26100		23400								

FEEDER ▨ TOP ☐ BOTTOM

LOAD TOTAL: 49,500

FLA 206

RatherArchitecture
Professional Corporation

1091 W South Jordan Parkway Suite 250
South Jordan, UT 84095
phone: 801 232-3638
email: john@ratherarchitecture.com

CONTRACTOR

PROJECT and OWNER

ADAM ANDERSON
Garage and Exercise Spa Addition

33 East 100 North
American Fork, UY 84002

REGISTERED PROFESSIONAL ENGINEER
No. 154867
DEAN PAUL LEVORSEN
STATE OF UTAH

REVISION 02/16/2022

No.	Description	Date
Orig	For review	10/1/2021
Rev A	For review	10/7/2021
Rev B	Added beam at wall	10/18/2021
Rev C	Added Shower	10/18/2021
Rev D	Owner Changes	11/10/2021
Rev E	Changes	11/13/2021
Rev 0	For Permit	12/22/2021
Rev 1	Struct., Mech. and Elect. Added	2/14/2022

Electrical Site Plan and Power Panel

Project number	1417.175.02
Date Started	29 Sep 2021
Drawn by	JDR
Checked by	NHR

E201

Scale As indicated

D:\Dropbox (Rather Architecture)\Rather Architecture Team Folder\Anderson Garage Addition\CAD\Anderson Garage Addition Rev 1.Dc5

GENERAL NOTES

1. NOTES AND DETAILS ON SHEETS S0.1 SHALL APPLY UNLESS OTHERWISE SHOWN OR NOTED ON THE APPROVED PLANS.
2. ALL CONSTRUCTION AND MATERIALS SHALL CONFIRM TO ALL APPLICABLE CODES AND REGULATIONS.
3. PRIOR TO FABRICATION, SHOP DRAWINGS SHALL BE SUBMITTED FOR APPROVAL BY THE ENGINEER OF RECORD ON ALL STRUCTURAL STEEL, REINFORCING STEEL, GLULAM BEAMS, AND ENGINEERED WOOD PRODUCTS.
4. IT IS THE CONTRACTOR'S RESPONSIBILITY TO COMPLY WITH ALL O.S.H.A. REQUIREMENTS. THE ENGINEER OF RECORD DOES NOT ACCEPT ANY RESPONSIBILITY FOR THE CONTRACTOR'S FAILURE TO COMPLY WITH THESE REQUIREMENTS.
5. THE CONTRACTOR SHALL BE RESPONSIBLE FOR ADEQUATE DESIGN AND CONSTRUCTION OF ALL FORMS AND SHORING REQUIRED, AND ANY OTHER TEMPORARY SUPPORT WHICH WILL BE NEEDED FOR THE SAFE COMPLETION OF THE PROJECT.
6. THE CONTRACTOR SHALL NOTIFY THE ENGINEER OF RECORD WHERE A CONFLICT OCCURS ON ANY OF THE CONTRACT DRAWINGS OR DOCUMENTS. THE CONTRACTOR IS NOT TO ORDER MATERIAL OR CONSTRUCT ANY PORTION OF THE BUILDING THAT IS IN CONFLICT UNTIL CONFLICT(S) IS/ARE RESOLVED WITH THE AFFECTED PARTIES.

APPLICABLE CODES

2018 INTERNATIONAL BUILDING CODE

DESIGN LOADS

SNOW LOAD (INCL. UNBALANCED DRIFT) = 25 psf
ROOF DEAD LOAD = 18 psf
FLOOR LIVE LOAD = 40 psf
FLOOR DEAD LOAD = 12 psf
WIND LOAD = 110 MPH, EXP. B

IMPORTANCE FACTOR (I_w) = 1.0

SEISMIC SITE CLASSIFICATION = D
SEISMIC DESIGN CATEGORY = D
IMPORTANCE FACTOR (Is) = 1.0
S_{DS} = 1.04 R = 4.0
$C_S = \frac{S_{DS}}{(R/T)} W$ = 0.26*W

FOUNDATION

1. ASSUMED ALLOWABLE BEARING OF 1500 PSF WITH 1/2 INCREASE FOR WIND OR SEISMIC.
2. ALLOWABLE SOIL BEARING PRESSURE:
   D.L. + L.L 1500 P.S.F.
   D.L. + L.L. + E/W 2250 P.S.F.
   INCREASE FOR DEPTH AS ALLOWED BY IBC.
3. FOOTINGS SHALL BEAR ON FIRM, DRY, UNDISTURBED NATURAL GROUND OR ENGINEERED FILL WITH A MINIMUM PENETRATION OF 30" INCHES BELOW FINISHED GRADE.
4. NOTIFY THE LOCAL JURISDICTION 48 HOURS BEFORE POURING FOUNDATIONS.

@DWGFULLNAMEEXT

CONCRETE

1. THE CONCRETE STRENGTHS SHOWN IN THE FOLLOWING TABLE ARE THE MINIMUM COMPRESSIVE STRENGTHS AT 28 DAYS: THE AGGREGATE SHOWN IS THE MAXIMUM SIZE: AND THE SLUMP IS THE MAXIMUM IN INCHES.

ITEM OF CONST.	STRENGTH (PSI)	AGGREGATE (INCHES)	SLUMP (INCHES)
FDNS.	3500	1	4
WALLS	3500	1	4
SLAB	4000	1	3-4

WATER CEMENT RATIO FOR CONCRETE AT SLAB SHALL BE . 5 OR LESS.

CONCRETE SLAB SHALL HAVE SEVEN DAYS OF WET CURE.

2. CONCRETE MIX DESIGN SHALL BE SUBMITTED TO THEARCHITECT/ENGINEER FOR APPROVAL PRIOR TO MIXING.
3. ADMIXTURE SHALL HAVE APPROVAL BY ARCHITECT/ENGINEER PRIOR TO THEIR USE. CALCIUM CHLORIDE SHALL NOT BE PERMITTED.
4. CEMENT SHALL CONFORM TO ASTM C150, TYPE I OR TYPE II.
5. CONCRETE AGGREGATE SHALL CONFORM TO ASTM C33 FOR NORMAL WEIGHT CONCRETE AND ASTM C330 FOR LIGHTWEIGHT CONCRETE.
6. REINFORCING SHALL CONFORM TO ASTM A615 GRADE 60 EXCEPT STIRRUPS AND TIES SHALL BE GRADE 40.
7. USE ASTM A706 WHERE REINFORCING STEEL IS TO BE WELDED.
8. WELDED WIRE FABRIC SHALL CONFORM TO ASTM A185.
9. ALL CONTINUOUS BARS SHALL BE LAPPED 48 BAR DIAMETERS AND ADJACENT SPLICES SHALL BE STAGGERED.
10. REINFORCING STEEL SHALL BE FABRICATED AND DETAILED ACCORDING TO THE "MANUAL OF STANDARD PRACTICE FOR REINFORCED CONCRETE CONSTRUCTION."
11. MINIMUM PROTECTIVE COVER REINFORCING STEEL:
    ON EARTH SIDE WHEN PLACED AGAINST EARTH: 3" CLR.
    ON EARTH SIDE WHEN FORMED: 2" CLR.
    SLAB ON GRADE STEEL: MID DEPTH
12. SLAB-ON-GRADE JOINTS: THE LOCATION OF ALL CONSTRUCTION, CONTROL AND WEAKENED PLANE JOINTS NOT SPECIFICALLY INDICATED ON THE DRAWINGS SHALL BE REVIEWED BY THE ENGINEER PRIOR TO THE PLACING OF THE REINFORCEMENT.
13. ALL BOLTS AND OTHER EMBEDED HARDWARE SHALL BE SECURELY HELD IN PLACE WITH TEMPLATE PRIOR TO PLACING CONCRETE.
14. ANCHOR BOLTS SHALL BE ASTM A307 OR EQUAL. UPSET THREADS WILL NOT BE PERMITTED ON ANCHOR BOLTS.

REINFORCING STEEL:

ASTM A307 ALL ANCHOR BOLTS - MINIMUM EMBEDMENT OF ALL BOLTS IN GROUT, OR CONCRETE TO BE 7" WITH A 3" HOOK AT EMBEDDED END. ASTM A615 (FY = 60,000 PSI) DEFORMED BARS FOR ALL BARS. WIRE PER ASTM A62. LATEST ACI CODE AND DETAILING MANUAL APPLY.

CLEAR CONCRETE COVERAGES AS FOLLOWS:

CAST AGAINST AND PERMANENTLY EXPOSED TO EARTH OR WEATHER 3"
a) #6 AND MORE 2"
b) #5 AND SMALLER 1 1/2"
SLABS (INTERIOR) 3/4"

ALL OTHER PER LATEST EDITION OF ACI 318. UNLESS NOTED OTHERWISE, LAP SPLICES IN CONCRETE SHALL BE 48 BAR DIAMETERS MINIMUM. STAGGER ALTERNATE SPLICES A MINIMUM OF ONE LAP LENGTH. PROVIDE BENT CORNER BARS TO MATCH AND LAP WITH HORIZONTAL BARS AT CORNERS AND INTERSECTIONS OF FOOTINGS AND WALLS, TYPICAL.

REINFORCING BAR SPACINGS GIVEN ARE MAXIMUM ON CENTER. SECURELY TIE ALL BARS IN LOCATION BEFORE PLACING CONCRETE. LAP WELDED WIRE FABRIC ONE SPACING OF CROSS WIRES PLUS 2".

ANCHOR BOLTS

1. WOOD PLATES OR SILLS SHALL BE BOLTED TO THE FOUNDATION OR FOUNDATION WALL. STEEL BOLTS SHALL HAVE A MINIMUM NOMINAL DIAMETER OF 5/8" UNLESS NOTED OTHERWISE. BOLTS SHALL BE EMBEDDED AT LEAST 7 INCHES INTO THE CONCRETE OR MASONRY AND SHALL BE SPACED NOT MORE THAN 32 INCHES APART. THERE SHALL BE A MINIMUM OF TWO BOLTS PER PIECE WITH ONE BOLT LOCATED NOT MORE THAN 12 INCHES OR LESS THAN SEVEN BOLT DIAMETERS FROM EACH END OF THE PIECE. A PROPERLY SIZED NUT AND WASHER SHALL BE TIGHTENED ON EACH BOLT TO THE PLATE. FOR SEISMIC DESIGN CATEGORIES D-F, WASHERS SHALL BE A MINIMUM OF 1/4" THICK BY 3" SQUARE PLATE WASHERS (REFER TO "BASIS FOR DESIGN/SEISMIC DESIGN" THIS SHEET FOR SEISMIC DESIGN CATEGORY) AT EXTERIOR WALLS, SHEARWALLS, AND INTERIOR BEARING WALLS WHERE 2x SILL PLATES ARE SPECIFIED. FOUNDATION PLATES AND SILLS SHALL BE THE KIND OF WOOD SPECIFIED IN 2012 IBC.
2. ALL SHEARWALLS SHALL BE ANCHORED TO THE CONCRETE PER THE SHEARWALL SCHEDULE AND/OR DETAILS.
3. WHERE EXTERIOR WALL EMBEDDED ANCHOR BOLTS HAVE BEEN MISSED, DAMAGED OR MISLOCATED, ONE OF THE FOLLOWING RETROFIT OPTIONS MAY BE USED AT THE CONTRACTORS DISCRETION:

3.1 5/8" DIAMETER EXPANSION BOLTS, PROVIDE (2) 5/8" DIAMETER EXPANSION ANCHORS FOR EACH 1/2" DIAMETER EMBEDDED ANCHOR BOLT. EXPANSION ANCHORS SHALL BE INSTALLED NOT CLOSER THAN 6 1/2" O.C. AND SHALL BE INSTALLED WITH A MINIMUM OF 4 1/8" EMBEDMENT AND SPACED 1 3/4" FROM THE EDGE OF THE SLAB. EXPANSION ANCHORS BEING INSTALLED LESS THAN 2" FROM THE EDGE OF THE CONCRETE SHALL BE EXPANSION STYLE ANCHORS WITH A MINIMUM CAPACITY OF 2400 LBS. TENSION AND 1800 LBS HORIZONTAL SHEAR IN CONCRETE. REFER TO MANUFACTURERS LATEST EDITION OF ICC ES REPORT FOR ALLOWABLE VALUES AND INSTALLATION ROCEDURES.

3.2 EPOXY BOLTS OF THE SAME DIAMETER AND SPACING MAY BE USED IN LIEU OF THE EMBEDDED BOLTS OR EXPANSION ANCHORS A 7" MINIMUM EMBEDMENT PROVIDED FOR EPOXY GROUTED BOLTS. USE EPOXY ANCHORED BOLTS PER MANUFACTUERER'S LATEST ICC ES REPORT TO GIVE THE SAME VALUES AS GIVEN IN PARAGRAPH 3.1 ABOVE.

4. WHERE INTERIOR ANCHOR BOLTS HAVE BEEN MISSED, DAMAGED OR MISLOCATED, ONE OF THE FOLLOWING RETROFIT OPTIONS MAY BE USED AT THE CONTRACTORS DISCRETION. INTERIOR ANCHOR BOLTS ARE DEFINED AS ANCHOR BOLTS THAT ARE LOCATED A MINIMUM OF 6 INCHES FROM SLAB EDGES, STEPS, TURN DOWNS, OPENINGS, OR SIMILAR DISCONTINUITIES.

4.1 EXPANSION BOLTS AND EPOXY ANCHORS SHALL HAVE CURRENT ICC ES REPORTS WHICH SATISFY THE REQUIREMENTS FOR ANCHORS WITH SEISMIC FORCES AND USE IN COLD-WEATHER CONDITIONS.

BOLT DIAMETER	MINIMUM EMBEDMENT
1/2"	2 1/4"
5/8"	2 3/4"
3/4"	3 1/4"

4.2 EPOXY BOLTS OF THE SAME DIAMETER AND SPACING MAY BE USED IN LIEU OF THE EMBEDDED BOLTS. A 7" MINIMUM EMBEDMENT SHALL BE PROVIDED FOR EPOXY GROUTED BOLTS. USE CARE AND CAUTION TO NOT DAMAGE ANY STEEL REINFORCEMENT IN CONCRETE, EITHER REINFORCEMENT BARS OR PT CABLES.

4.1 EPOXIED ANCHORS REQUIRE SPECIAL INSPECTION. REFER TO SPECIAL INSPECTION FORM FILED WITH PARK CITY, UTAH.

5. INTERIOR NON-SHEAR LOADED PARTITION WALLS MAY BE ANCHORED TO THE SLAB WITH A MINIMUM 0.140 INCH DIAMETER SHOT PINS AT 32" O.C. MAXIMUM SPACING.

TYPICAL CONCRETE SLAB

4" CONCRETE SLAB PLACED OVER 2" WET SAND, VAPOR BARRIER. 4" OF GRAVEL OVER COMPACTED EARTH PAD.
REINFORCE CONC. SLAB WITH #4 BARS PLACED AT 18" O.C. AT MID-DEPTH OF SLAB
TOP OF SLAB ELEVATION SHALL MATCH THE ELEVATION OF EXISTING BUILDING SLAB.

WOOD

1. ALL STRUCTURAL LUMBER SHALL CONFORM TO THE LATEST EDITION OF THE WESTERN WOOD PRODUCT ASSOCIATION GRADE RULES BOOK AND UNLESS NOTED OTHERWISE ON PLANS OR IN SPECIFICATIONS SHALL BE DOUGLAS FIR/LARCH AS FOLLOWS:

   a. STUDS: 2x4, 4x4
   No. 2 GRADE
   F_b = 875 psi
   E = 1,500 ksi

   b. LIGHT FRAMING: 2x6 TO 2X12, 4x4 TO 4X6
   No. 2 GRADE
   F_b = 875 psi
   E = 1,500 ksi

   c. BEAMS & STRINGERS:
   No. 1 GRADE
   F_b = 1,350 psi
   E = 1,600 ksi

   d. POSTS & TIMBERS:
   No. 1 GRADE
   F_b = 1,200 psi
   E = 1,600 psi

2. ALL SHEATHING SHALL BE C-C OR C-D GRADE AND SHALL CONFORM TO THE PRODUCT STANDARD P.S. 1-95 (EXP. 1) AND SHALL BE IDENTIFIED WITH THE A.P.A. GRADE MARK. SEE PLANS FOR THICKNESS, PANEL IDENTIFICATION INDEX

   ALL PLY SHALL BE NAILED AS FOLLOWS:
   AT SHEET EDGES (E.N.): 8d @ 6"O.C., UNO
   AT FIELD NAILING (F.N.):
   -FLOOR: 8d @ 10"O.C., UNO
   -WALLS & ROOF: 8d @ 12"O.C., UNO

AT WALLS, BLOCK ALL UNSUPPORTED EDGES WITH BLOCKING OF SAME WIDTH OR DEPTH OF STUDS OR JOISTS. 2x4 FLAT BLOCKS SHALL BE USED AT ROOF DIAPHRAGM, WHERE SHOWN ON PLAN. MINIMUM PANEL DIMENSIONS ARE 24" ON ROOF AND 12" ON WALLS.

3. USE OF MACHINE NAILING IS SUBJECT TO SATISFACTORY JOBSITE DEMONSTRATION FOR EACH PROJECT AND THE APPROVAL BY THE PROJECT ENGINEER OF RECORD AND THE ENFORCEMENT AGENCY. THE APPROVAL IS SUBJECT TO CONTINUED SATISFACTORY PERFORMANCE. MACHINE NAILING WILL NOT BE ACCEPTED IN 5/16" INCH PLYWOOD. IF NAILHEADS PENETRATE THE OUTER PLY MORE THAN WOULD BE NORMAL FOR A HAND HAMMER, OR IF MINIMUM ALLOWABLE EDGE DISTANCES ARE NOT MAINTAINED, THE PERFORMANCE WILL BE DEEMED UNSATISFACTORY. FULL HEAD COMMON NAILS WITCH PROVIDE MINIMUM DEPTH OF EMBEDMENT WILL BE REQUIRED.
4. ALL PLATES AND SILLS BEARING ON CONCRETE OR MASONRY SHALL BE PRESSURE TREATED DOUGLAS FIR(P.T.D.F.) AND SHALL BEAR A.W.P.A. STAMP.
5. STUD WALLS BUTTING A CONCRETE OR MASONRY WALL SHALL BE BOLTED TO THE WALL WITH 1/2" DIA. ANCHOR BOLTS AT 24" O.C. THROUGH DOUBLE STUD, UNO
6. NAILING SHALL BE WITH COMMON WIRE NAILS AND SHALL CONFORM TO THE NAILING SCHEDULE, TABLE 2304.9.1 OF THE LATEST EDITION OF THE INTERNATIONAL BUILDING CODE.
7. ALL BOLTS, NUTS AND LAG SCREWS USED IN WOOD SHALL CONFORM TO ASTM STANDARD A307 AND SHALL BE LOCATED IN A MEMBER WITH THE FOLLOWING MINIMUM DIMENSION (UNLESS DETAILED OTHERWISE):

   BOLT TO END OF MEMBER = 7d
   BOLT TO EDGE OF MEMBER = 4d
   ON-CENTER SPACING OF BOLTS IN A ROW = 4d O.C.
   SPACING BETWEEN BOLT ROWS = 1

8. ALL BOLTS AND NUTS SHALL BE FITTED WITH STEEL WASHERS WHERE THEY BEAR AGAINST WOOD, AND ALL BOLTS AND LAG SCREWS SHALL BE TIGHTENED UPON INSTALLATION AND RETIGHTENED PRIOR TO CLOSING IN OR COMPLETION OF JOB.
9. ALL HANGERS, STRAPS, AND OTHER MISCELLANEOUS HARDWARE SHALL BE SIMPSON STRONG TIE OR I.C.B.O. APPROVED EQUAL.

WOOD (CONT.)

10. SOLID FULL DEPTH BLOCKING OR CROSS BRIDGING SHALL BE INSTALLED AT INTERVALS NOT EXCEEDING 8'-0" FOR ALL 2X JOISTS 8" AND DEEPER @ ROOF AND 4" AND DEEPER @ FLOOR.
11. ALL JOINTS SHALL HAVE THEIR ENDS HELD IN POSITION AT ALL BEARING POINTS BY BLOCKING OR APPROVED HANGERS.
12. NO LOAD MEMBER MAY FALL BELOW GRADE.

MICROLLAM BEAMS:

BEAMS SHALL HAVE THE FOLLOWING PROPERTIES:
Fb = 2,600 P.S.I., Fv = 285 P.S.I,
Fc (PERP) = 750 P.S.I, E = 1,900,000 PSI.

PARALLAM BEAMS:

BEAMS SHALL HAVE THE FOLLOWING PROPERTIES:
Fb= 2,900 P.S.I., Fv = 290 P.S.I,
Fc (PERP) = 650 P.S.I, E = 2,000,000 PSI.

GLUE-LAMINATED BEAMS:

BEAMS SHALL HAVE THE FOLLOWING PROPERTIES:
Fb = 2,400 P.S.I., Fv = 400 P.S.I,
Fc (PERP) = 680 P.S.I, E = 1,300,000 PSI.

PRECAST THIN WALL SPECIFICATIONS:
1. MIN. THICKNESS OF WALL 10" TOTAL.
2. MIN, EXTERIOR FACE 3" AND INTERIOR FACE SHELLS 2" THICK
3. MIN. REINFORCEMENT IN EACH FACE .0025 X AREA SQ. IN./FT.
4. DESIGN LOADS:
   WIND FORCES PER ASCE 7 FOR WIND EXPOSURE B, 110 MPH
   SEISMIC SHEAR FORCE IN PLANE OF WALL 370 PLF
   LATERAL SEISMIC FORCE OF OUT OF PLANE OF WALL 34 PSF
   VERTICAL AXIAL LOAD ON WALL 1470 PLF PLUS WEIGHT OF WALL
   LATERAL SOIL PRESSURE AGAINST BASE OF WALL 700 PLF
5. FABRICATOR SHALL DESIGN AND SELECT EMBEDS FOR CONNECTIONS TO TOP OF FOOTING AND TO ROOF MEMBERS. LOCATION OF EMBEDS SHALL BE COORDINATED WITH CONTRACTOR FOR PLACEMENT IN TOP OF FOOTINGS AND TOP OF WALLS.

DEFERRED SUBMITTAL ITEMS:
1. PREFABRICATED ROOF TRUSSES
2. PRECAST CONCRETE THIN WALL SYSTEM.
   SUBMIT TO OWNER, ARCHITECT, ENGINEER, AND CITY FOR REVIEW CALCULATIONS, SHOP DRAWINGS, LAYOUT, AND ERECTION PROCEDURES.

RatherArchitecture
Professional Corporation
1091 W South Jordan Parkway Suite 250
South Jordan, UT 84095
phone: 801 232-3638
email: john@ratherarchitecture.com

CONSULTANT

PROJECT and OWNER

ADAM ANDERSON
Garage and Exercise Spa Addition

33 East 100 North
American Fork, UY 84002

Licensed Certified Structural Engineer No. 155346 DARRELL GEORGE HANSEN STATE OF UTAH
2-17-2023

REVISION

No.	Description	Date
Orig	For review	10/1/2021
Rev A	For review	10/7/2021
Rev B	Added beam at wall	10/18/2021
Rev C	Added Shower	10/18/2021
Rev D	Owner Changes	11/10/2021
Rev E	Changes	11/13/2021
Rev 0	For Permit	12/22/2021

Project number	2203
Date Started	4 Feb 2022
Drawn by	DGH
Checked by	DGH

GENERAL NOTES

S0.1

Scale As indicated

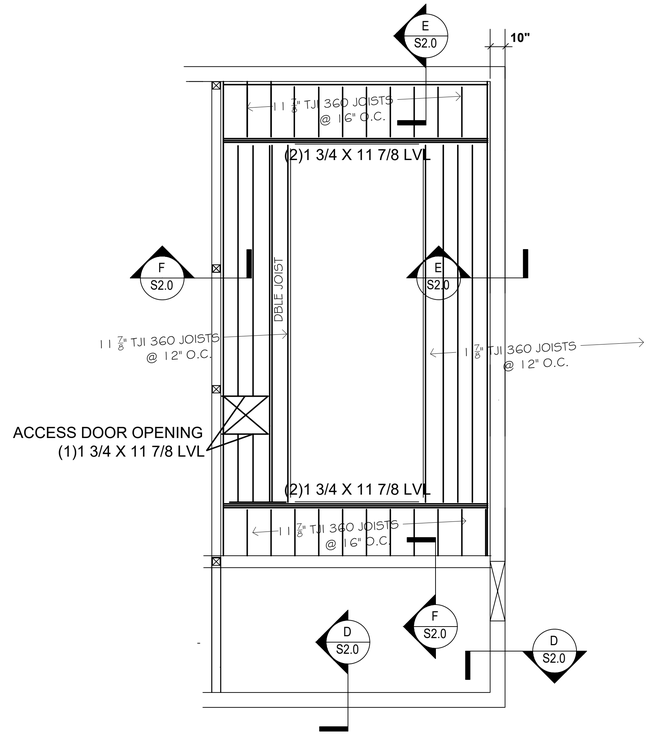

Floor Framing Plan

Scale: 1/4" = 1'-0"

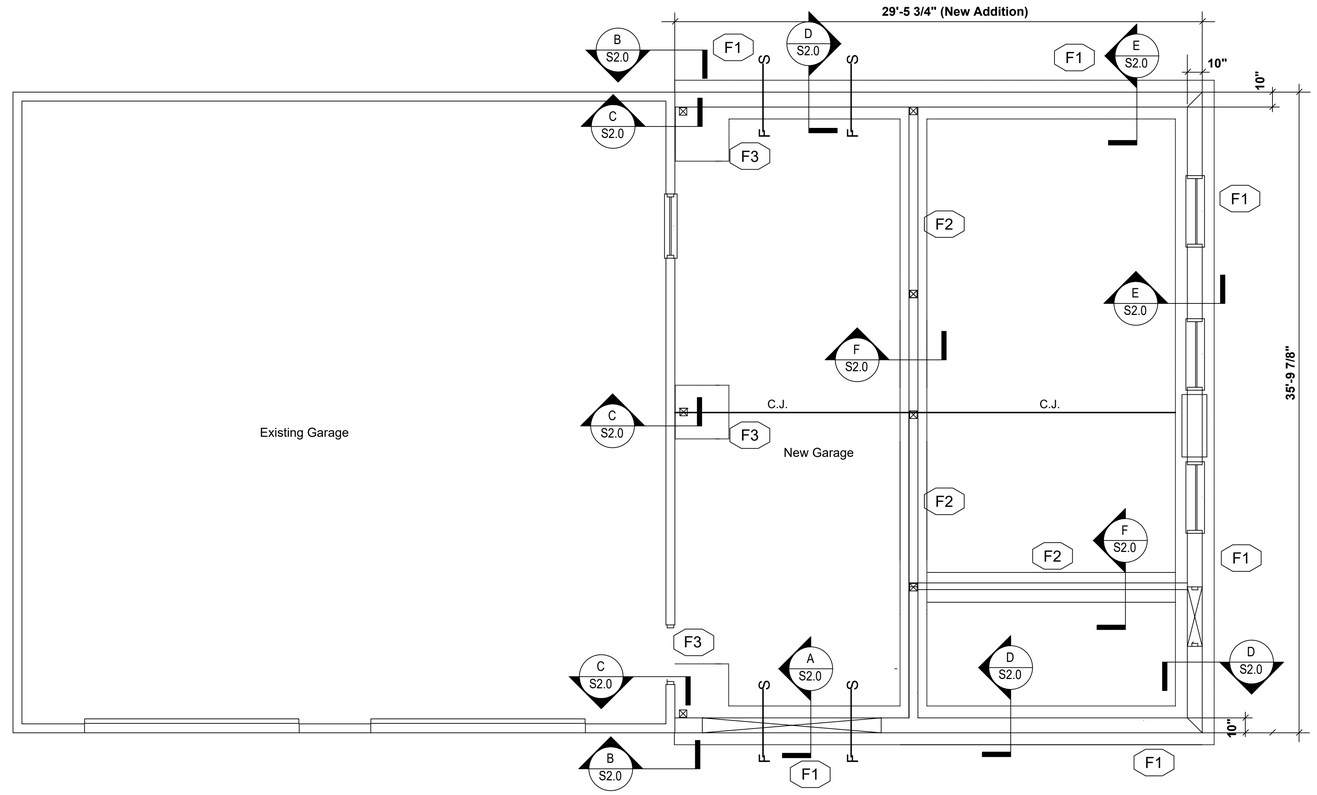

Foundation and Footing Plan

Scale: 1/4" = 1'-0"

1. TYPICAL FLOOR SHEATHING SHALL BE 3/4 IN. T & G, APA RATED 48/24 OSB OR PLYWOOD SHEATHING NAILED WITH 10d NAILS AT 6 IN. O.C. AT ALL PANEL ENDS, SUPPORTED EDGES, TOP OF WALLS, AND ALL BLOCKING; 10D AT 10 IN. O.C. ALONG INTERMEDIATE FRAMING MEMBERS. NAILING SHALL BE SPACED AT 6 IN. MINIMUM FROM EDGE OF PANEL.
2. LAY SHEATH WITH FACE GRAIN AT RIGHT ANGLES TO FRAMING WITH END JOINTS STAGGERED. GLUE WITH GLUE CONFORMING TO AFG-01 ACCORDING TO APA SPECIFICATIONS.
3. BLOCK JOISTS SOLID AT ALL BEARING POINTS.

FOOTING SCHEDULE

MARK	WIDTH	LENGTH	THICKNESS	TRANSVERSE	LENGTHWISE
F1	2'-0"	CONTINUOUS	12"		(2) #5 BARS
F2	2'-6"	CONTINUOUS	12"		(3) #5 BARS
F3	3'-0"	3'-0"	12"	(4) #5 BARS	(4) #5 BARS

1. PLACE REBAR 3" CLEAR FROM BOTTOM.
2. F ----- S INDICATES STEP IN FOOTING

1. ALL FOOTINGS ARE BASED ON AN ALLOWABLE SOIL BEARING PRESSURE OF 1500 PSF. ANY SOIL CONDITION ENCOUNTERED DURING EXCAVATION THAT IS CONTRARY TO THOSE USED FOR DESIGN OF FOOTINGS AS OUTLINED IN WORKING DRAWINGS SHALL BE BROUGHT TO THE ATTENTION OF THE ARCHITECT/ENGINEER BEFORE PROCEEDING.
2. ALL FOOTINGS SHALL BEAR ON NATURAL UNDISTURBED SOIL OR ON ENGINEERED GRANULAR FILL COMPACTED TO 95% OF MAX DENSITY, BASED ON ASTM D1557 METHOD OF COMPACTION. FILL SHALL BE PLACED IN LAYERS NOT TO EXCEED EIGHT INCHES IN DEPTH AFTER COMPACTION AND SHALL EXTEND DOWN TO IN-SITU COHESIVE SOILS. FILL SHALL BE COMPACTED UNDER ALL CONCRETE WORK ON THE SITE.
3. NO FOOTINGS SHALL BE PLACED IN WATER OR ON FROZEN GROUND.
4. ALL EXCAVATIONS ADJACENT TO AND BELOW FOOTING ELEVATION FOR OTHER TRADES SHALL BE ACCOMPLISHED PRIOR TO POURING ANY FOOTINGS.
5. CONTRACTOR SHALL BE RESPONSIBLE FOR LATERALLY SUPPORTING ALL RETAINING TYPE FOUNDATION WALLS WHILE COMPACTING BEHIND WALLS AND UNTIL ALL SUPPORTING MEMBERS HAVE BEEN PLACED (SUCH AS FLOOR SLABS). ALL OPEN EXCAVATIONS AND TRENCHES SHALL BE SUPPORTED AND BARRICADED BY CONTRACTOR TO CONFORM WITH OSHA SAFETY STANDARDS.
6. ALL REINFORCEMENT SHALL BE SECURELY TIED IN PLACE PRIOR TO POURING CONCRETE.
7. ALL SLABS ON GRADE SHALL BE OVER 4" OF 3/4" FREE-DRAINING GRANULAR FILL. TYPICAL SLABS SHALL BE REINFORCED WITH #4 BARS AT 18"o.c. SEE PLANS AND DETAILS FOR SPECIAL REINFORCING ETC.

RatherArchitecture
Professional Corporation

1091 W South Jordan Parkway Suite 250
South Jordan, UT 84095
phone: 801 232-3638
email: john@ratherarchitecture.com

CONSULTANT

PROJECT and OWNER

ADAM ANDERSON
Garage and Exercise Spa Addition

33 East 100 North
American Fork, UY 84002

2-17-2023

REVISION

No.	Description	Date
Orig	For review	10/1/2021
Rev A	For review	10/7/2021
Rev B	Added beam at wall	10/18/2021
Rev C	Added Shower	10/18/2021
Rev D	Owner Changes	11/10/2021
Rev E	Changes	11/13/2021
Rev B	For Permit	12/22/2021
Rev F	For Permit	2/15/2023

Project number	2203
Date Started	4 Feb 2022
Drawn by	DGH
Checked by	DGH

FOUNDATION PLAN

S1.0

Scale As indicated

@DWGFULLNAMEEXT

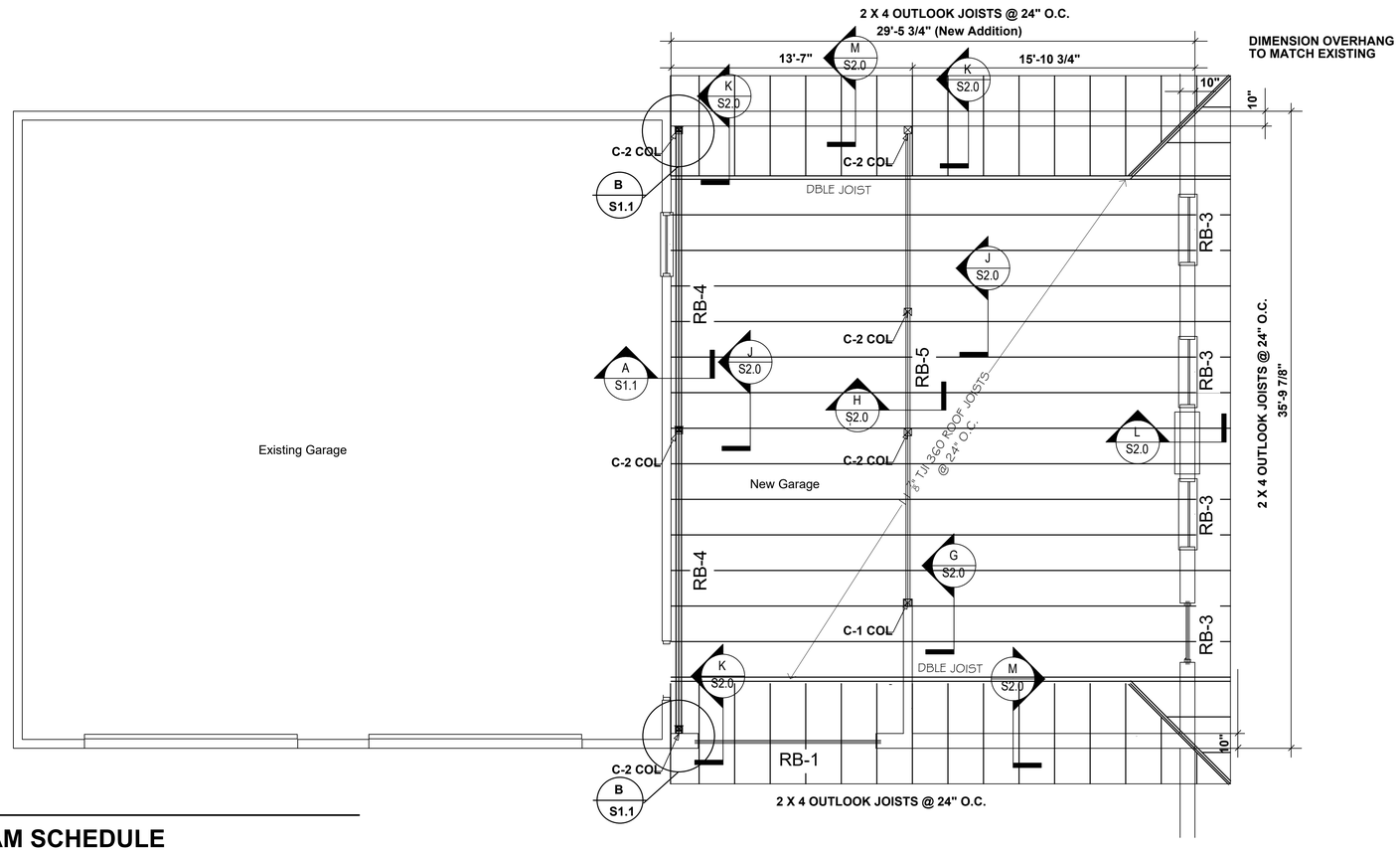

Roof Framing Plan

Scale: 1/4" = 1'-0"

North

ROOF BEAM SCHEDULE

BEAM #	SIZE	TYPE	COLUMN
RB-1	DESIGN BY THIN WALL		
RB-2	DESIGN BY THIN WALL		
RB-3	DESIGN BY THIN WALL		
RB-4	(3) 1 $\frac{3}{4}$ X 14	MICROLAM	C-2
RB-5	(3) 1 $\frac{3}{4}$ X 11 7/8	MICROLAM	C-2

COLUMN SCHEDULE

COL #	SIZE	TYPE
C-1	(2) 2X6 TRIMMERS AND (1) 2X6 KING STUD	DOUG FIR
C-2	6X6 POST (PLUS 2-KING STUDS IN WALLS)	DOUG FIR

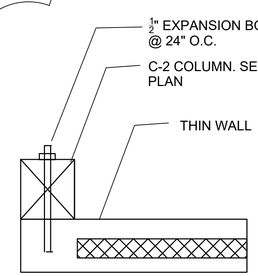

B S1.1 CONNECTION C-2 COL. TO WALL

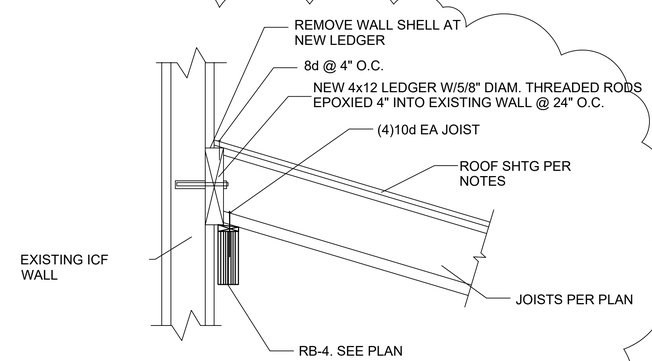

A S1.1 CONNECTION OF JOISTS TO EXISTING WALL FOR LATERAL FORCE TRANSER

RatherArchitecture
Professional Corporation
1091 W South Jordan Parkway Suite 250
South Jordan, UT 84095
phone: 801 232-3638
email: john@ratherarchitecture.com
CONSULTANT

PROJECT and OWNER

ADAM ANDERSON
Garage and Exercise Spa Addition

33 East 100 North
American Fork, UY 84002

2-17-2023

REVISION

No.	Description	Date
Orig	For review	10/1/2021
Rev A	For review	10/7/2021
Rev B	Added beam at wall	10/18/2021
Rev C	Added Shower	10/18/2021
Rev D	Owner Changes	11/10/2021
Rev E	Changes	11/13/2021
Rev G	For Permit	12/22/2021
Rev F	For Permit	2/15/2023

Project number	2203
Date Started	4 Feb 2022
Drawn by	DGH
Checked by	DGH

ROOF FRAMING PLAN

S1.1

Scale As indicated

@DWGFULLNAMEEXT

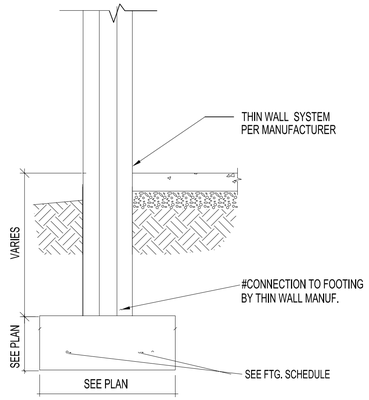

D DETAIL-TYPICAL FOUNDATION

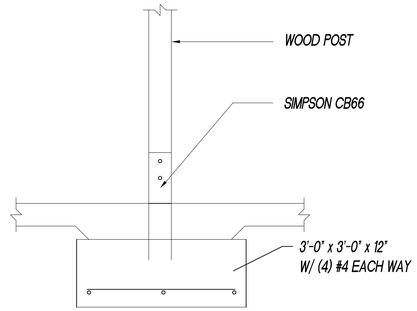

C DETAIL-INTERIOR POST TO FOOTING

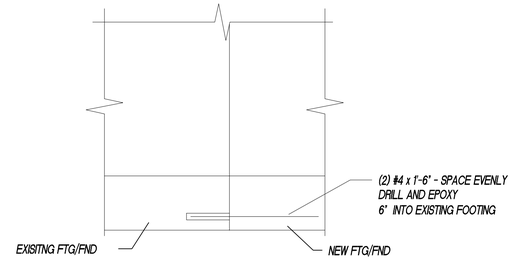

B DETAIL-CONNECTION NEW FOUNDATION TO EXISTING

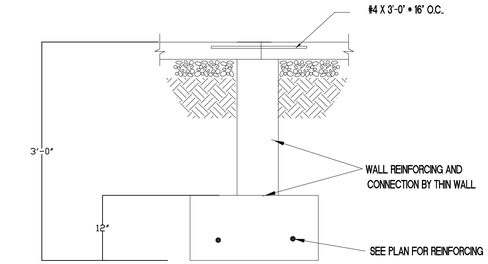

A DETAIL-TYPICAL SHORT FOUNDATION AT DOORS

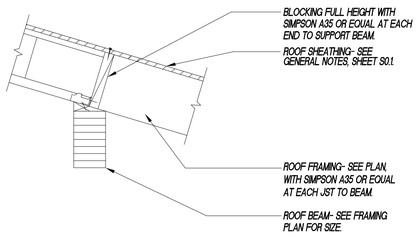

H DETAIL-TYPICAL ROOF JOISTS TO INTERIOR BEAM

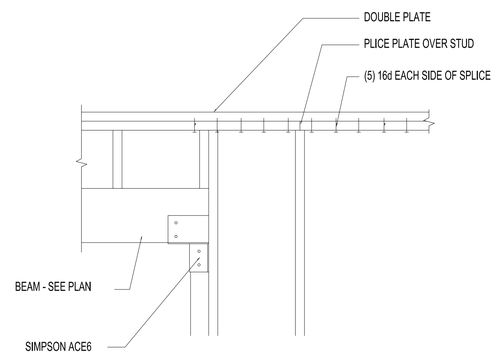

G DETAIL-TYPICAL HEADER TO WALL

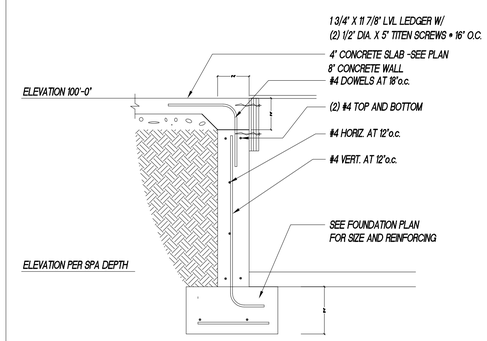

F DETAIL-TYPICAL INTERIOR BASEMENT FOUNDATION

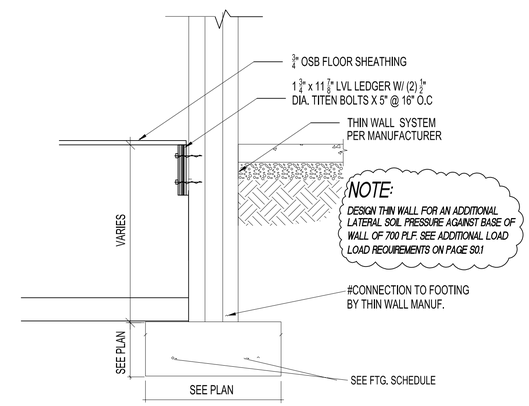

E DETAIL-TYPICAL FOUNDATION AT BASEMENT

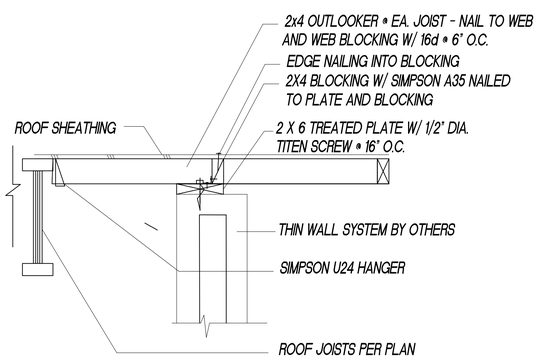

M DETAIL-OVERHANG FRAMING PARALLEL TO ROOF JOISTS

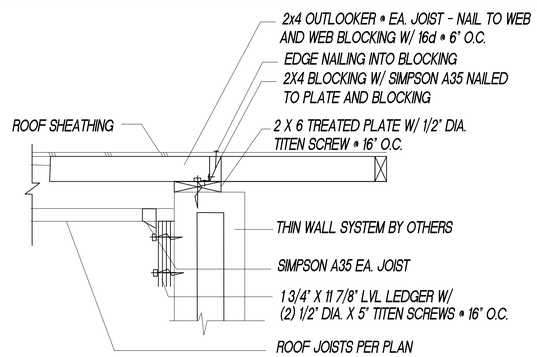

L DETAIL-ROOF JOISTS TO EXTERIOR WALL

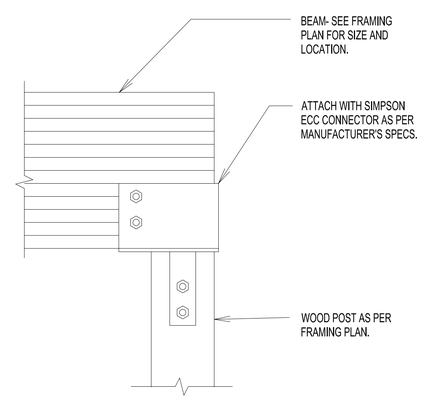

K DETAIL-TYPICAL END OF BEAM TO POST

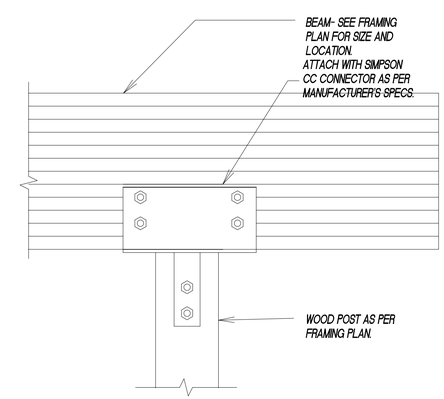

J DETAIL-TYPICAL CONTINUOUS BEAM TO POST

RatherArchitecture
Professional Corporation
1091 W South Jordan Parkway Suite 250
South Jordan, UT 84095
phone: 801 232-3638
email: john@ratherarchitecture.com
CONSULTANT

PROJECT and OWNER

ADAM ANDERSON
Garage and Exercise Spa Addition

33 East 100 North
American Fork, UY 84002

2-17-2023

REVISION

No.	Description	Date
Orig	For review	10/1/2021
Rev A	For review	10/7/2021
Rev B	Added beam at wall	10/18/2021
Rev C	Added Shower	10/18/2021
Rev D	Owner Changes	11/10/2021
Rev E	Changes	11/13/2021
Rev G	For Permit	12/22/2021

Project number	2203
Date Started	4 Feb 2022
Drawn by	DGH
Checked by	DGH

STRUCTURE DETAILS

S2.0

Scale As indicated

AMERICAN FORK CITY **MEETING DATE:** March 22, 2023
PLANNING COMMISSION STAFF REPORT

AGENDA TOPIC:

Review and action on a Site Plan application for the Children's Justice Center Project, located at 96 S 100 E, in the Central Commercial (CC-1) Zone.

BACKGROUND INFORMATION		
Location:		96 South 100 East
Project Type:		Site Plan
Applicants:		Utah County Children's Justice Center, Legend Engineering
Existing Land Use:		General Commercial
Proposed Land Use:		N/A
Surrounding Land Use:	North	General Commercial
	South	Residential High Density
	East	Residential High Density
	West	Residential High Density
Existing Zoning:		CC-1
Proposed Zoning:		N/A
Surrounding Zoning:	North	CC-1
	South	R4-7500
	East	R4-7500
	West	R4-7500

BACKGROUND:

The applicant is applying for Site Plan Approval for the Children's Justice Center, for the development of a justice center for children facing abuse, located at 96 South 100 East. The proposal consists of 1 parcel for a governmental structure and the entire development parcel consists of approximately 0.2 acres. The current site has been approved by City Council to have 6 parking stalls, but no Site Plan has been approved just yet. The Children's Justice Center Project has been brought back to Planning Commission because the previous Site Plan that was approved had seven parking stalls, now they are providing 6. Due to this Site Plan adjustment, it has been brought back to Planning Commission and will need a recommendation to their parking stalls for their final step of the Site Plan.

Sec 17.6.101 Administrative Site Plan Review

Wherever the terms of this code require submission and approval of a site plan, such review shall be conducted in accordance with the following provisions.

1. Planning commission to approve. The planning commission, acting in an administrative capacity, shall have the function, duty and power to approve or disapprove a project plan and to attach such modifications or conditions as may be deemed appropriate to improve the layout, to ensure that the project will not pose any detrimental effect to persons or property, or to protect the health, safety, and general welfare of the citizens of the city.
2. Application required. Application for site plan approval shall be submitted on forms provided by the city and shall be accompanied by maps and drawings showing the following:
    1. The location of all existing and proposed buildings and structures on the site, with full dimensions showing the distance between buildings and distances from buildings to adjacent property lines.
    2. The location of all parking spaces, driveways, and points of vehicular ingress and egress.
    3. A landscaping plan showing the location, types, and initial sizes of all planting materials to be used together with the location of fences, walls, hedges, and decorative materials.
    4. Preliminary elevations of main buildings showing the general appearance and types of external materials to be used.
    5. The locations of solid waste receptacles and trash pick-up areas.
3. Appeals permitted. Any person aggrieved by a determination of the planning commission may request a hearing before the city council who shall have the authority to reverse, affirm or modify any decision of said commission. Any such appeal shall be filed within ten days of the determination of the planning commission.
4. Issuance of a permit. A building permit shall not be issued for any building or structure or external alterations thereto until the provisions of this section have been complied with. Any construction not in conformance with an approved site plan shall be considered a violation of this code. Any building permit issued shall ensure that development is undertaken and completed in conformity with the plans as approved.

PROJECT MAP:

FINDINGS OF FACT:

- Reduction of parking can be requested and recommended by Planning Commission. This is mentioned in Section 17.5.133 (D) of American Fork City Municipal Code.
- City Council has approved this site to have 6 parking stalls, but still needs to be recommended by Planning Commission
- Planning Commission will be the approval body of this Site Plan as it resides in the CC-1 zone. This is mentioned in Section 17.4.401 (D) of American Fork City Municipal Code.

STANDARD CONDITIONS OF APPROVAL:

APPLICANT is responsible and shall submit/post/obtain all necessary documentation and evidence to comply with these Standard Conditions of Approval prior to any platting, permitting, or any other form of authorization by the City including plat recording or other property conveyance to the City and prior to scheduling a pre-construction meeting. All recording shall take place at the Utah County Recorder's Office.

1. **Title Report:** Submit an updated Title Report not older than 30 days or other type of appropriate verification that shows all dedications to the City are free and clear of encumbrances, taxes, or other assessments.
2. **Property Taxes and Liens:** Submit evidence that all the property taxes, for the current and/or previous years, liens, and agricultural land use roll over fees have been paid in full.
3. **Water Rights:** Submit evidence that all the required water rights have been conveyed to American Fork City.
4. **Performance Guarantee:** Post a performance guarantee for all required public and essential common improvements.
5. **Easements and Agreements:** Submit/record a long-term Storm Water Pollution Prevention Maintenance Agreement signed and dated by the property owner and any required easement documentation.
6. **Land Disturbance Permit:** Obtain a Land Disturbance Permit.
7. **Compliance with the Plan Review Comments:** All plans and documents shall comply with all the Technical Review Committee comments and the City Engineer's final review.
8. **Commercial Structure:** Record an Owner Acknowledgment and Utility Liability Indemnification if the proposed building is a multi-unit commercial structure served by a single utility service.
9. **Sensitive Lands:** Record all applicable documents required for compliance with the City's Sensitive Lands Ordinance.
10. **Utility Notification Form:** Submit a Subdivision Utility Notification Form.
11. **Professional Verification:** Submit final stamped construction documentation by all appropriate professionals.
12. **Fees:** Payment of all development, inspection, recording, streetlight, and other project related fees.
13. **Mylar:** Submit a Mylar. All plats will receive final verification of all formats, notes, conveyances, and other items contained on the plat by City staff (recorder, legal, engineer, GIS, planning).

POTENTIAL MOTIONS – Site Plan

APPROVAL

Madame Chairwoman, I move that we approve the site plan and recommend the reduction of parking stalls to _____ stalls, for the redevelopment of a property for use as the Children's Justice Center, located at 96 South 100 East, in the CC-1 zone, subject to any conditions found in the Staff Report and recommended by the Fire Marshall.

DENIAL

Madame Chairwoman, I move that we deny the site plan and parking reduction request for the redevelopment of a property for use as the Children's Justice Center, located at 96 South 100 East, in the CC-1 zone.

TABLE

Madame Chairwoman, I move that we table action on the site plan and parking reduction request for the redevelopment of a property for use as the Children's Justice Center, located at 96 South 100 East, in the CC-1 zone, and instruct the developer/staff to _____.

UTAH COUNTY CHILDREN'S JUSTICE CENTER
96 S 100 E,
AMERICAN FORK, UTAH 84003

The only significant change made to design from what Engineering had previously reviewed was to remove on-site parking as City Council approved the site for 6 stalls instead of 7 stalls. At this time Engineering has no additional comments.

VICINITY MAP

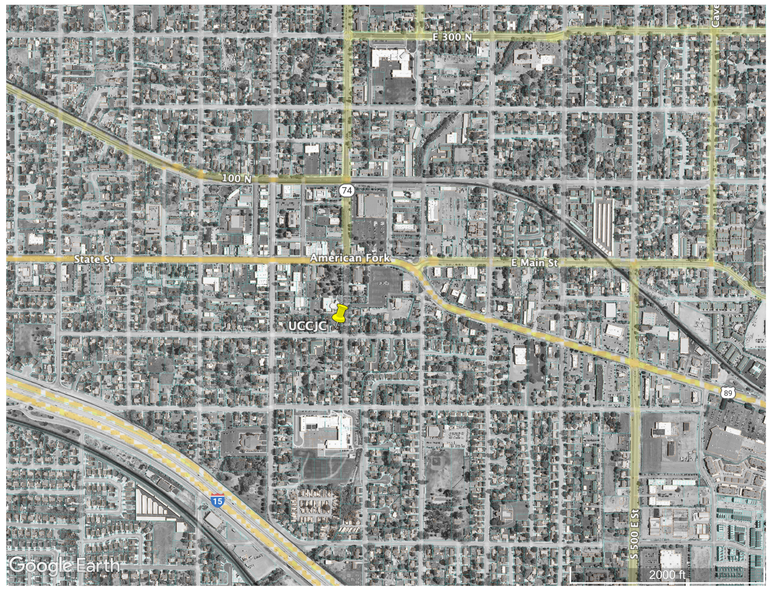

N

INDEX

C-0 Cover Sheet
C-1 Site Plan
C-2 Grading Plan
C-3 Utility Plan
C-4 Details

American Fork City
Development Review
Committee

PLANNING AND ZONING APPROVED
TVANEKELENBURG
3/1/23

Engineering Division
Reviewed
lburr 03/01/2023

CIVIL ENGINEER
LEGEND ENGINEERING
CAL JOHNSON
52 WEST 100 NORTH
HEBER CITY, UTAH 84032
(435) 654-4828

SURVEYOR
AZTEC ENGINEERING
AARON THOMAS
732 NORTH 780 WEST
AMERICAN FORK, UTAH 84003
PHONE

CONTRACTOR
THE CM PROS
DAVID THORNE
(801) 919-9858

LEGEND & ABBREVIATION TABLE

R.O.W./PROPERTY LINE		EXISTING CURB AND GUTTER	
EASEMENT LINE		PROPOSED CURB AND GUTTER	
CENTER LINE		INVERT ELEVATION	IE
PROPOSED TRAIL		TOP BACK CURB	TBC
PROPOSED WATER LINE	—W—W—	TOP ASPHALT	TA
PROPOSED PRESSURIZED IRRIGATION	—PI—PI—	TOP OF GRATE	TOG
PROPOSED SEWER LINE	—SS—SS—	FINISHED GRADE	FG
PROPOSED STORM DRAIN LINE	—SD—SD—	TOP OF CONCRETE	TC
EXISTING SEWER LINE	-SS-	HIGH WATER ELEVATION	HWE
EXISTING WATER LINE	-W-	CATCH BASIN	
EXISTING STORM DRAIN LINE	-SD-	PROPOSED STREET LIGHT	
EXISTING CONTOUR	4960	STORM DRAIN MANHOLE	D
FINISHED CONTOUR	4947.00	SANITARY SEWER MANHOLE	S
		PROPOSED WATER VALVE	WV

Company : AF Public Works	Contact	Number
- Culinary Water/P.I.	Jay Brems	(801)763-3060
- Sewer/Storm Drain	Ashton Hardy	(801)763-3060
- City Inspector	Dee Howard	(801)763-3060
- SWPPP Inspector	Harlan Nielson	(801)763-3060
AF Fiber	Will Davis	(801)897-9826
AF Fire Marshall	Mat Sacco	(801)763-3045
AF Irrigation Company	Ernie John	(801)471-6576
Blue Stake UT 811		(800)662-4111
Comcast	Elysia Valdez	(801)401-3017
Century Link	Bill Westfall	(435)623-4252
Dominion Energy	Trent Johnson	(801)853-6548
T.S.S.D.	David Barlow	(801)756-5231
Mitchell Hollow Irrigation Co.	Dale Jones	(801)768-8150
Rocky Mountain Power	Teria Walker	(801)756-1310

NO.	REVISIONS	BY	DATE

ENGINEER: CJ CHECKED BY: LR

LEGEND ENGINEERING
52 WEST 100 NORTH
HEBER CITY, UT 84032
PHONE: 435-654-4828
www.legendengineering.com

UTAH COUNTY CHILDREN'S JUSTICE CENTER
COVER SHEET
96 S 100 E, AMERICAN FORK CITY, UTAH 84003

PROFESSIONAL ENGINEER
No. 11316562-2202
CALVIN S JOHNSON
STATE OF UTAH

SHEET: C-0

PLANNING COMMISSION

DATE: 2/16/2023

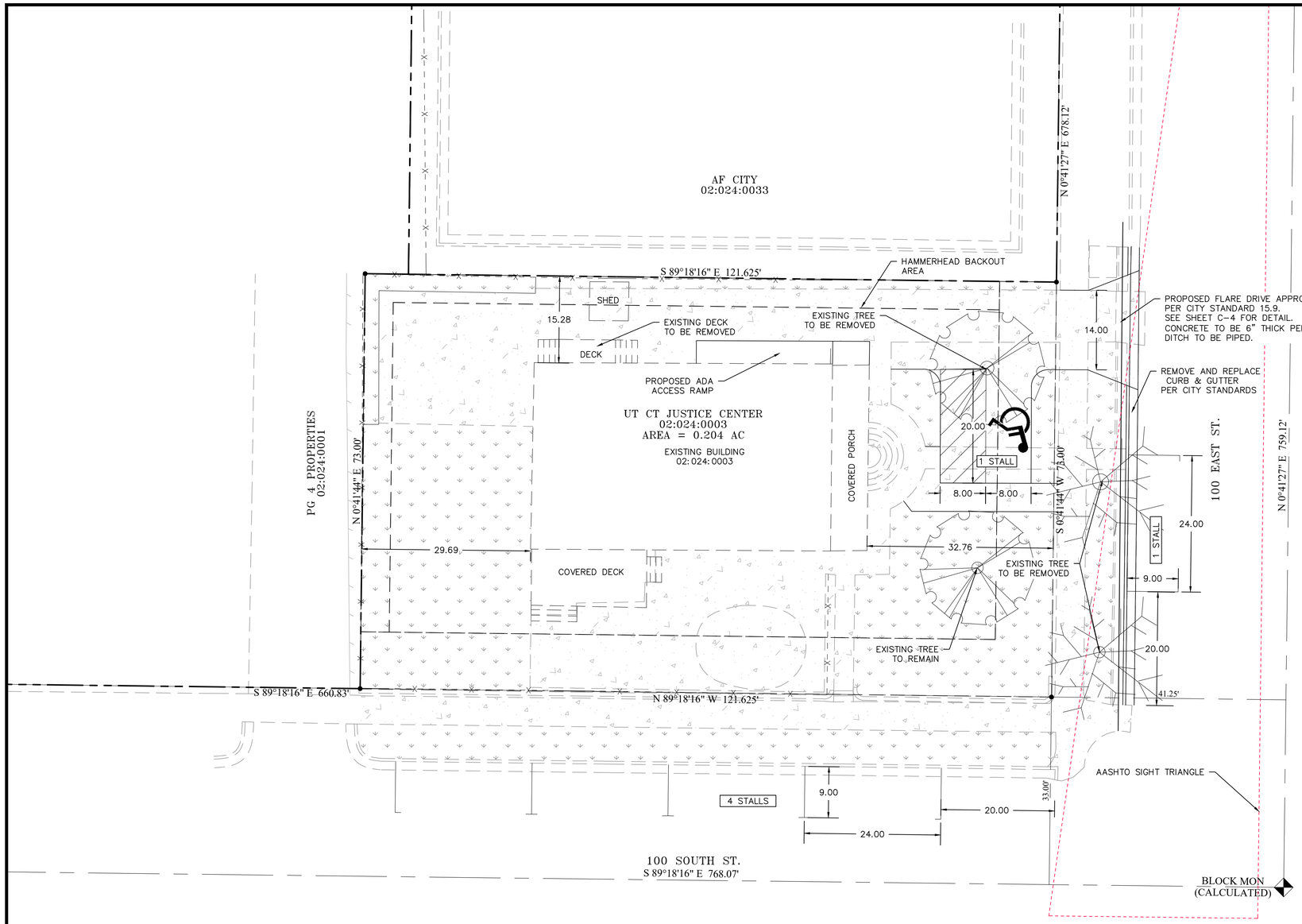

LEGEND

LOT LINES (PROPERTY)	
EXISTING CURB AND GUTTER	
PROPOSED CURB AND GUTTER	
SETBACK LINE	
EXISTING FENCE	
LANDSCAPE AREA	
CONCRETE AREA	
GRADE BREAK	GB
INVERT ELEVATION	IE
TOP OF GRATE	TOG
TOP OF ASPHALT	TA
TOP BACK OF CURB	TBC
PROPOSED	PROP
EXISTING	EX
FINISHED GRADE	FG
FINISHED FLOOR ELEVATION	FFE
BACK OF SIDEWALK	BOW

SITE DATA

LOT AREA:	8,886	SF (0.20 ACRES)
BUILDING AREA:	2,185	SF± 24.6%
PAVEMENT AREA:	3,769	SF± 42.4%
LANDSCAPE AREA:	2,932	SF± 33.0%

BUILDING DATA

ZONE: CC-1 (CENTRAL COMMERCIAL ZONE)

PARKING TABULATION

PROVIDED: 1 STALL ON SITE (1 ADA)
5 ON STREET STALLS

GENERAL NOTES:
1. CONTRACTOR SHALL CALL 811 PRIOR TO CONSTRUCTION.
2. CONTRACTOR SHALL VERIFY LOCATION AND ELEVATION OF ALL EXISTING UTILITY LINES AND STRUCTURES PRIOR TO CONSTRUCTION.
3. ALL PROPOSED WATER LINES SHALL HAVE A MINIMUM OF 5' OF COVER.
4. ALL SEWER, WATER AND STORM DRAIN PIPES SHALL BE BACKFILLED WITH SELECT GRANULAR FILL AS PER CITY STANDARDS.
5. ANY OFF SITE DAMAGE TO EXISTING ASPHALT, CURB & GUTTER, LANDSCAPING AND ALL UTILITIES SHALL BE REPLACED IN KIND.
6. SEE UTILITY PLAN FOR CONSTRUCTION OF SEWER AND WATER LINES.
7. ALL WORK SHALL BE ACCORDING TO CITY STANDARDS.

N

0 10 20 30
1" = 10'
Scale in Feet

PLANNING COMMISSION

NO.	REVISIONS	BY	DATE

ENGINEER: LR CHECKED BY: LR

LEGEND ENGINEERING
52 WEST 100 NORTH
HEBER CITY, UT 84032
PHONE: 435-654-4828
www.legendengineering.com

LEGEND ENGINEERING

UTAH COUNTY CHILDREN'S JUSTICE CENTER
SITE PLAN
96 S 100 E, AMERICAN FORK CITY, UTAH 84003

PROFESSIONAL ENGINEER
No. 11316562-2202
CALVIN S JOHNSON
STATE OF UTAH

SHEET: C-1

DATE: 2/22/2023

L:\Legend Projects\Kyune Eng - Utah County Children's Justice Center_Sheet Files\AF CHILDRENS JUSTIC CENTER.dwg - - Feb 22, 2023-9:17am

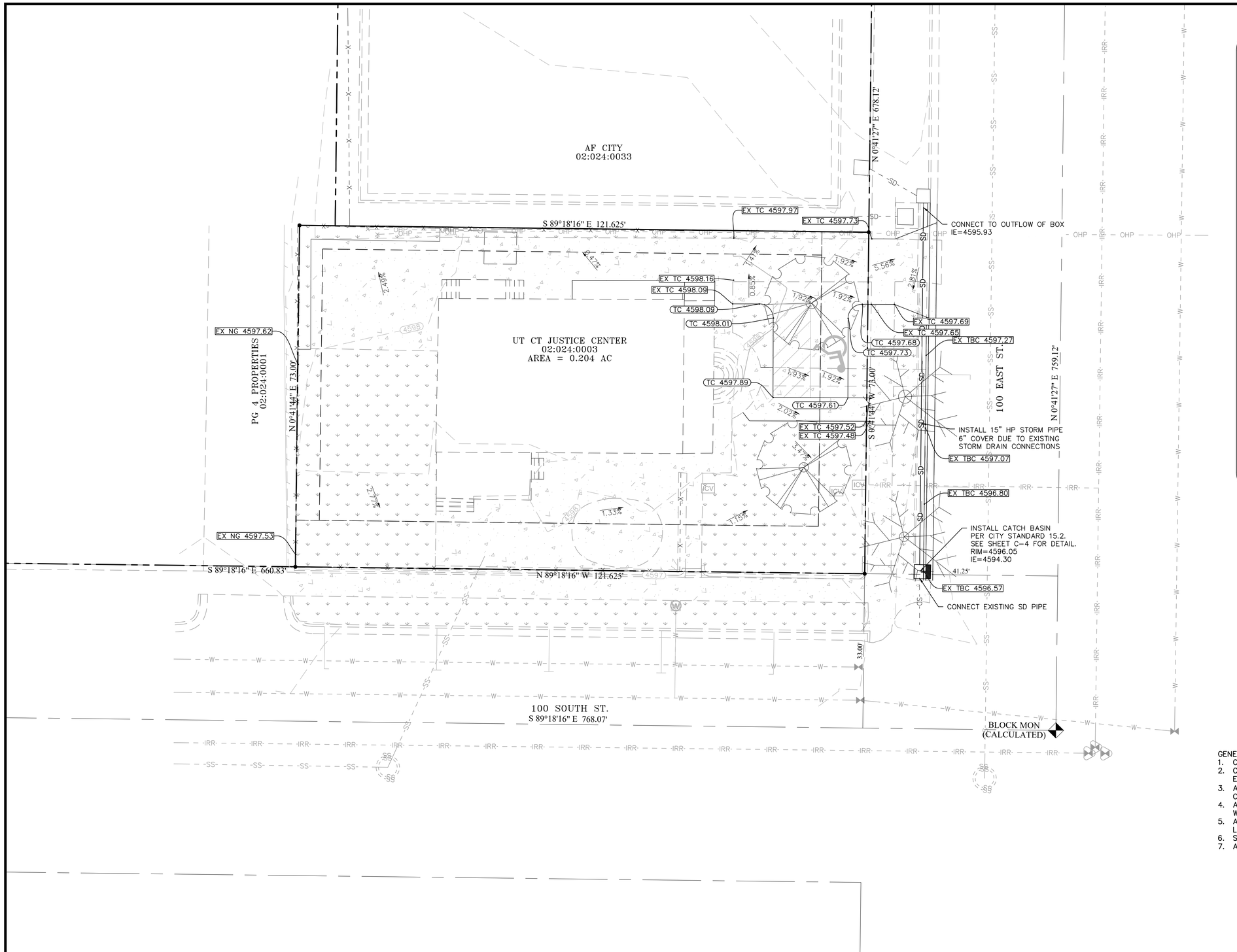

LEGEND

LOT LINES (PROPERTY)	
EXISTING CURB AND GUTTER	
PROPOSED CURB AND GUTTER	
PROPOSED STORM DRAIN LINE	SD
EXISTING STORM DRAIN LINE	-SD-
PROPOSED SEWER LINE	SS
EXISTING SEWER LINE	-SS-
PROPOSED WATER LINE	W
EXISTING WATER LINE	-W-
EXISTING FENCE	-X-
GRADE BREAK	GRADE BREAK
FINISH GRADE CONTOUR LINES	4960
EXISTING GRADE CONTOUR LINES	4960
FINISH GRADE SLOPE	SLOPE
GRADE BREAK	GB
INVERT ELEVATION	IE
TOP OF GRATE	TOG
TOP OF ASPHALT	TA
TOP OF CONCRETE	TC
PROPOSED	PROP
EXISTING	EX
FINISHED GRADE	FG
FINISHED FLOOR ELEVATION	FFE
BACK OF SIDEWALK	BOW
LANDSCAPE AREA	
CONCRETE AREA	

GENERAL NOTES:
1. CONTRACTOR SHALL CALL 811 PRIOR TO CONSTRUCTION.
2. CONTRACTOR SHALL VERIFY LOCATION AND ELEVATION OF ALL EXISTING UTILITY LINES AND STRUCTURES PRIOR TO CONSTRUCTION.
3. ALL PROPOSED WATER LINES SHALL HAVE A MINIMUM OF 5' OF COVER.
4. ALL SEWER, WATER AND STORM DRAIN PIPES SHALL BE BACKFILLED WITH SELECT GRANULAR FILL AS PER CITY STANDARDS.
5. ANY OFF SITE DAMAGE TO EXISTING ASPHALT, CURB & GUTTER, LANDSCAPING AND ALL UTILITIES SHALL BE REPLACED IN KIND.
6. SEE UTILITY PLAN FOR CONSTRUCTION OF SEWER AND WATER LINES.
7. ALL WORK SHALL BE ACCORDING TO CITY STANDARDS.

811

N

0 10 20 30
1" = 10'
Scale In Feet

NO.	REVISIONS	BY	DATE

ENGINEER: CJ CHECKED BY: LR

LEGEND ENGINEERING
52 WEST 100 NORTH
HEBER CITY, UT 84032
PHONE: 435-654-4828
www.legendengineering.com

LEGEND ENGINEERING

UTAH COUNTY CHILDREN'S JUSTICE CENTER
GRADING AND DRAINAGE PLAN
96 S 100 E, AMERICAN FORK CITY, UTAH 84003

PROFESSIONAL ENGINEER
No. 11316562-2202
CALVIN S JOHNSON
STATE OF UTAH

SHEET: C-2

DATE: 2/16/2023

PLANNING COMMISSION

L:\Legend Projects\Kyune Eng - Utah County Children's Justice Center_Sheet Files\AF CHILDRENS JUSTIC CENTER.dwg - - Feb 16, 2023-2:13pm

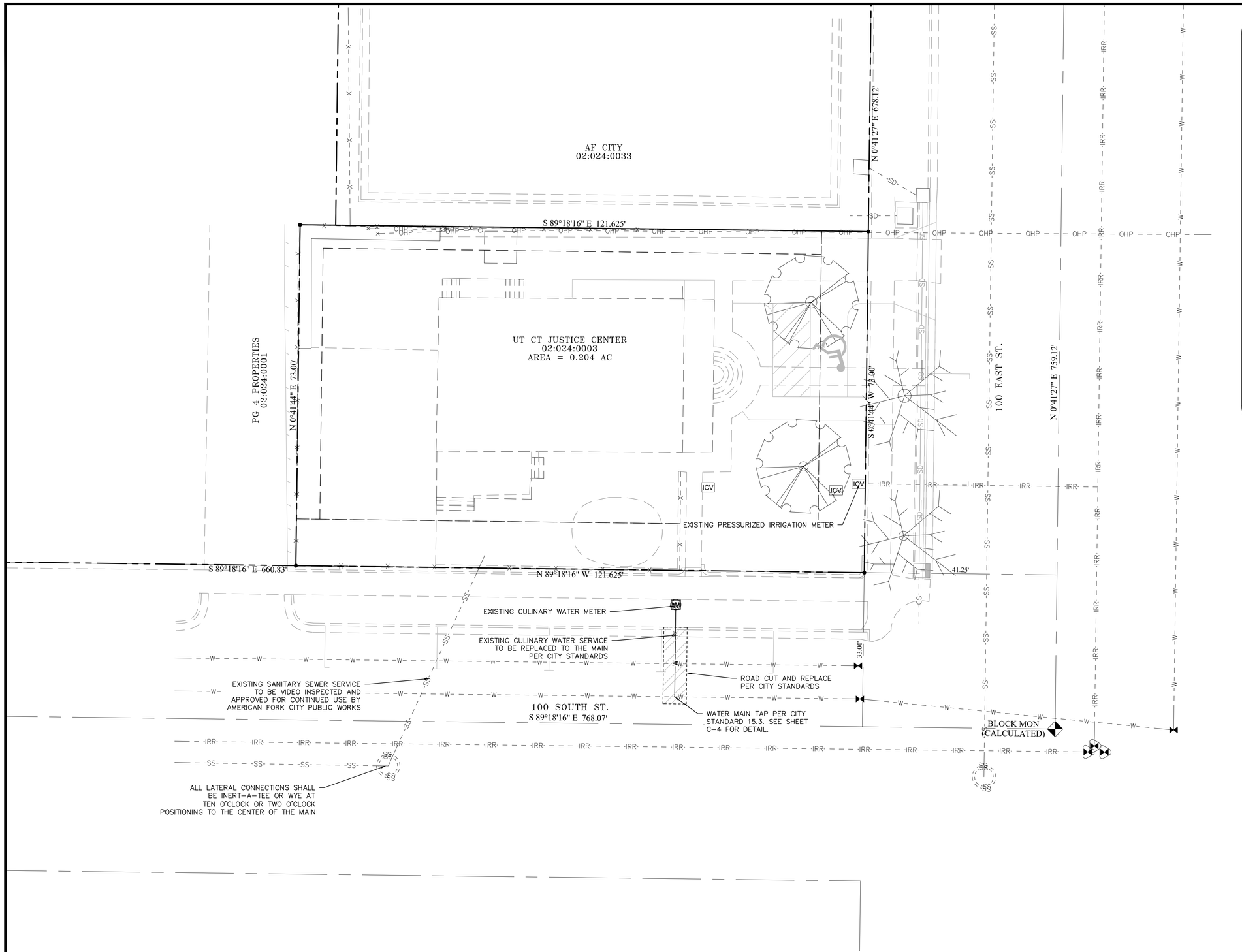

LEGEND

PROPERTY/ROW LINE	
EXISTING CURB AND GUTTER	
PROPOSED CURB AND GUTTER	
PROPOSED STORM DRAIN LINE	SD
EXISTING STORM DRAIN LINE	SD
PROPOSED SEWER LINE	SS
EXISTING SEWER LINE	SS
PROPOSED WATER LINE	W
EXISTING WATER LINE	W
EXISTING GAS LINE	G
INVERT ELEVATION	IE
PROPOSED	PROP
FINISHED FLOOR ELEVATION	FFE
EXISTING FIRE HYDRANT	
EXISTING WATER VALVE	WV
EXISTING WATER METER	WM
EXISTING SEWER MANHOLE	S
PROPOSED FIRE HYDRANT	
PROPOSED WATER VALVE	
PROPOSED WATER METER	WM
PROPOSED SEWER CLEANOUT	
PROPOSED SEWER MANHOLE	S

GENERAL NOTES:
1. CONTRACTOR SHALL CALL 811 PRIOR TO CONSTRUCTION.
2. CONTRACTOR SHALL VERIFY LOCATION AND ELEVATION OF ALL EXISTING UTILITY LINES AND STRUCTURES PRIOR TO CONSTRUCTION.
3. ALL PROPOSED WATER LINES SHALL HAVE A MINIMUM OF 5' OF COVER.
4. ALL SEWER, WATER AND STORM DRAIN PIPES SHALL BE BACKFILLED WITH SELECT GRANULAR FILL AS PER CITY STANDARDS.
5. ANY OFF SITE DAMAGE TO EXISTING ASPHALT, CURB & GUTTER, LANDSCAPING AND ALL UTILITIES SHALL BE REPLACED IN KIND.
6. SEE UTILITY PLAN FOR CONSTRUCTION OF SEWER AND WATER LINES.
7. ALL WORK SHALL BE ACCORDING TO CITY STANDARDS.

N

0 10 20 30
1" = 10'
Scale in Feet

PLANNING COMMISSION

NO.	REVISIONS	BY	DATE

ENGINEER: CJ CHECKED BY: LR

LEGEND ENGINEERING
52 WEST 100 NORTH
HEBER CITY, UT 84032
PHONE: 435-654-4828
www.legendengineering.com

UTAH COUNTY CHILDREN'S JUSTICE CENTER
UTILITY PLAN
96 S 100 E, AMERICAN FORK CITY, UTAH 84003

PROFESSIONAL ENGINEER
No. 11316562-2202
CALVIN S JOHNSON
STATE OF UTAH

SHEET: C-3

DATE: 2/16/2023

L:\Legend Projects\Kyune Eng - Utah County Children's Justice Center_Sheet Files\AF CHILDRENS JUSTIC CENTER.dwg - - Feb 16, 2023-2:14pm

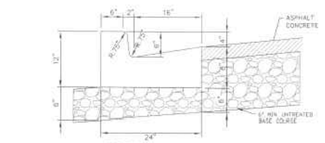

TYPE E CURB & GUTTER
-NTS-

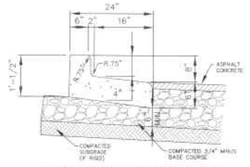

REVERSE LIP CURB & GUTTER "PRIVATE USE ONLY"
-NTS-

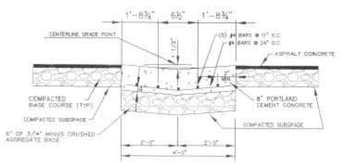

4.0' VALLEY GUTTER
-NTS-

DRAWN: JRP REVISED: DATE: MAY 2002 SCALE: VARIES	Northern	AMERICAN FORK CITY	STANDARD DETAIL FOR: TYPE B1 C&G REVERSE LIP C&G VALLEY GUTTER	DRAWING NO. 15.1

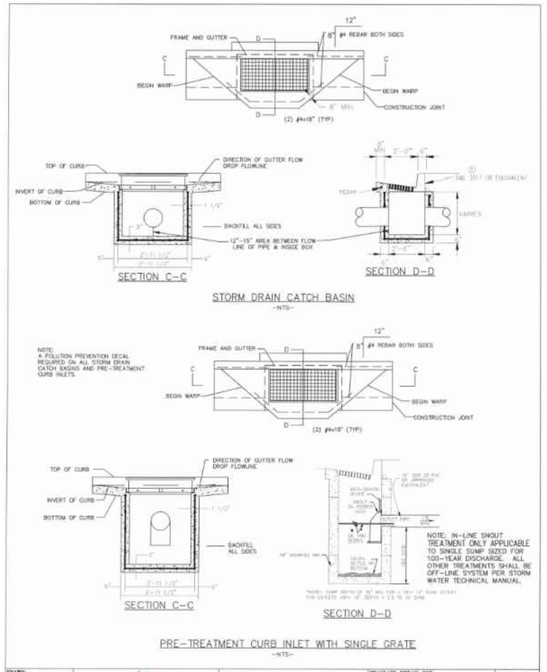

DRAWN: JRP REVISED: AJS DATE: APRIL 2012 SCALE: VARIES	AMERICAN FORK	AMERICAN FORK CITY	STANDARD DETAIL FOR: CATCH BASIN	DRAWING NO. 15.2

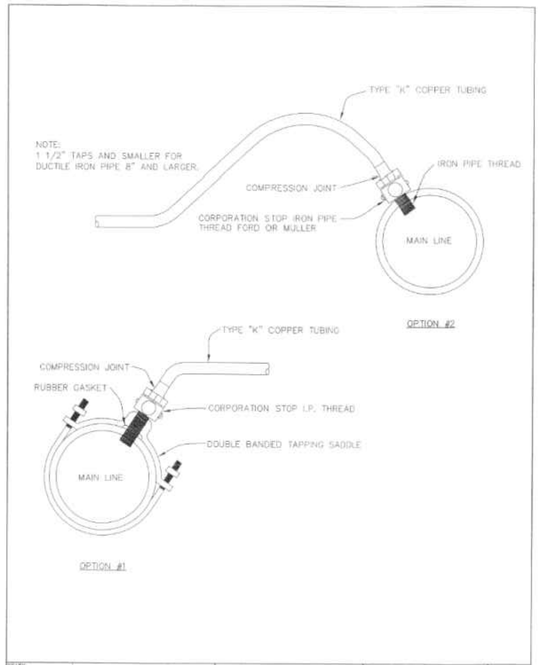

DRAWN: JRP REVISED: DATE: JULY 2002 SCALE: VARIES	Northern	AMERICAN FORK CITY	STANDARD DETAIL FOR: TYPICAL WATERMAIN TAPS	DRAWING NO. 15.3

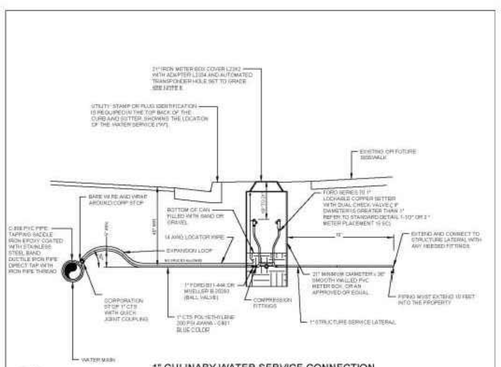

NOTES:

1. METER BOX, COVER, COPPERSETTER, CORPORATION STOP, & SERVICE LINE TO BE PURCHASED AND INSTALLED BY CONTRACTOR. METER IS REQUIRED AND MUST BE PURCHASED BY THE PROPERTY OWNER FROM THE CITY. METER IS PROVIDED AND INSTALLED BY THE CITY.
2. STAINLESS STEEL STIFFENERS ARE REQUIRED ON ALL POLYETHYLENE CONNECTIONS.
3. CULINARY WATER LATERALS THAT ARE LAID PARALLEL TO A SEWER MUST BE LAID AT LEAST 10' (EDGE TO EDGE) FROM ANY EXISTING OR PROPOSED SEWER.
4. CULINARY WATER LATERALS MUST CROSS.
5. WHERE WATER AND SEWER LATERALS MUST CROSS, WATER LATERAL SHALL BE A MINIMUM OF 18" ABOVE THE SEWER LATERAL AS MEASURED EDGE TO EDGE. (PER UTAH CODE R309-550.7)
6. TEFLON TAPE OR APPROVED EQUAL IS REQUIRED ON ALL THREADED CONNECTIONS.
7. ALL WORK IN THE PUBLIC RIGHT OF WAY CONCRETE SHALL BE DYE, AGAINST WEDGE & EXCEPT TRAFFIC (WITH A RECESSED TRANSPONDER HOLE SET TO GRADE.
8. ALL FITTINGS SHALL BE C.T.S.
9. SPUCHO (REPAIR OF EXISTING POLY PIPE) MECHANICAL COMPRESSION (WITH INTERNAL STIFFENERS) ARE REQUIRED MUST BE APPROVED BY AMERICAN FORK CITY.
10. LATERALS SHALL BE 18" OR 1 FOOT CONTRACTOR LOCATES OF ANY UTILITIES PRIOR TO DIGGING AND PROVIDE SUPPORT TO STRUCTURE AND SHALL BE BURIED AT A MINIMUM OF 48" UNLESS APPROVED BY THE CITY ENGINEER.
10.1 METER CAN SHALL BE INSTALLED AT THE CENTER OF THE PARK STRIP BETWEEN FRONT OF SIDEWALK AND BACH OF CURB.

DRAWN BY: M.P. REVISED: ABM DATE: 9/16/2019 SCALE: VARIES	AMERICAN FORK — 1853 —	AMERICAN FORK CITY PUBLIC WORKS 275 EAST 200 NORTH (801)763-9030	1" CULINARY WATER SERVICE CONNECTION	DRAWING NO. 15.5

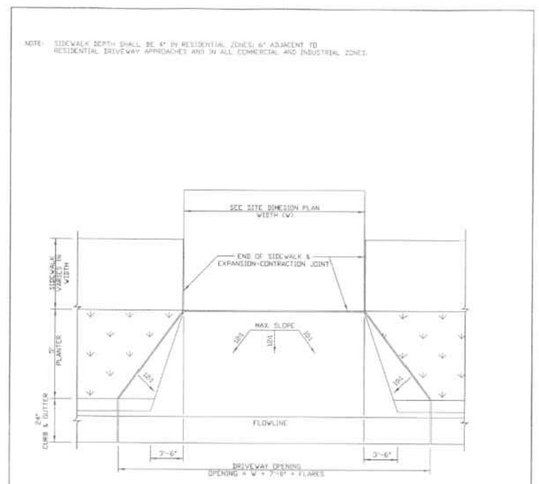

DRAWN: JRP REVISED: DATE: MAY 2002 SCALE: VARIES	Northern	AMERICAN FORK CITY	STANDARD DETAIL FOR: FLARED DRIVE APPROACH WITH PLANTER	DRAWING NO. 15.9

NO.	REVISIONS	BY	DATE

ENGINEER: CJ CHECKED BY: LR

LEGEND ENGINEERING
52 WEST 100 NORTH
HEBER CITY, UT 84032
PHONE: 435-654-4828
www.legendengineering.com

UTAH COUNTY CHILDREN'S JUSTICE CENTER
DETAILS
96 S 100 E, AMERICAN FORK CITY, UTAH 84003

PROFESSIONAL ENGINEER
No. 11316562-2202
CALVIN S JOHNSON
STATE OF UTAH

SHEET: C-4

PLANNING COMMISSION

DATE: 2/16/2023